HARS

www. hars-vfd.com

4XH35QB191211-350

Small Universal Inverter

INSTRUCTION MANUAL

220V LEVEL 0.4KW - 3.0KW

400V LEVEL 0.4KW - 7.5KW

- Please read the instructions carefully and understand the content so as to install and use correctly.
- Please give the instructions to the final user and save it carefully
- The technological standards of this product may be changed, but we will not make a notice about it.

2RI20200703 1.5 Version B
Beginning date: July 03rd, 2020
Number: XM-H0125
V1.5

Declaration

Thanks for choosing the inverter. Before you use it, please read the instructions carefully, and making sure that you have known about all the safety precaution.

Safety Precaution:

1. Before wring, please make sure that the input power is off.
2. The wring work should be operated by the professional electrical engineer.
3. The grounding terminals must be connected with the ground.
4. Having paused circuit wiring emergently, please make sure that the check is effective.
5. Do not connect the output wire of the inverter with the shell, and pay attention that the output wire should not be short-circuited.
6. Please check whether the voltage of the AC main circuit power is consistent with the rated voltage of the inverter.
7. Do not do the voltage withstand test on the inverter.
8. Please connect the brake resistor according to the wiring diagram.
9. Do not connect the power to the U, V, W output terminals.
10. Do not connect the contactor with the output circuit.
11. Mare sure to install a protection cover before power-on. When removing the cover, be sure to make the power off.
12. If you want to reset the inverter with the retry function, do not get close to the mechanical equipment, because the inverter will restart suddenly when the alarm stops.
13. Confirmthat the operation signal is cut off. Before reset the alarm device, or the inverter may start suddenly.
14. Do not touch the terminals of inverter, which are very dangerous because there is high voltage on them.
15. When power is on, do not change the wiring and terminal.
16. Cut off the main circuit power before doing some check and maintain work.
17. Do not arbitrarily reform the inverter.

1、Technical Data

Rated data of Inverter				
Model	Power	Source	Output	
			Voltage/Frequency	Current(A)
HS350-0.4G1	0.4KW	Single Phase AC 220V-240V 50Hz/60Hz	Three Phase AC 0 - 240V 0 - 999Hz	2.3
HS350-0.75G1	0.75KW			4
HS350-1.5G1	1.5KW			7
HS350-2.2G1	2.2KW			9.5
HS350-3.0G1	3.0KW			13
HS350-0.75G2	0.75KW	Single Phase AC 220V-240V 50Hz/60Hz	Three Phase AC 0 - 440V 0 - 999Hz	2.5
HS350-1.5G2	1.5KW			4.1
HS350-2.2G2	2.2KW			5.8
HS350-3.0G2	3.0KW			7.5
HS350-4.0G2	4.0KW			9.4
HS350-0.4G3	0.4KW	Three Phase AC 380V-440V 50Hz/60Hz	Three Phase AC 0 - 440V 0 - 999Hz	2.1
HS350-0.75G3	0.75KW			2.5
HS350-1.5G3	1.5KW			4.1
HS350-2.2G3	2.2KW			5.8
HS350-3.0G3	3.0KW			7.5
HS350-4.0G3	4.0KW			9.4
HS350-5.5G3	5.5KW			12.6
HS350-7.5G3	7.5KW			16.1

2、Installment and Wiring

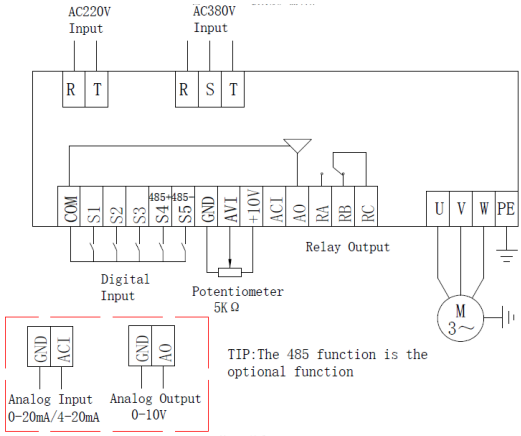

Terminal Function Instructions

Terminal	Function	Setting and Instruction
R、S、T	Inverter input voltage： 380V Model connect with R、S、T terminals 220V Model connect with R、S or R、T terminals （decided by the labels on the terminals）	Air switch should be used as the over-current protection device in front of the inverter power. If there is LCDI, and it is afraid of breakdown, please choose the LCDI whose sensitivity level is above 200mA and reaction period last more than 100ms.
U、V、W	Inverter output, connected with electrical machine	In order to reduce the leakage of current, the connection wire should not be over 50 meters.
P、B	Connected with braking resistor	According to the list of braking resistors, choose an appropriate one.
PE	Connected with the ground	The inverter should be connected with the ground well.

Terminal	Function	Setting and Instruction
COM	Digital signal common port	Zero potential of digital signal
S1	Digital input S1	Set according to parameter F2.13, and factory set defaults tobe FWD.
S2	Digital input S2	Set according to parameter F2.14, and factory set defaults tobe REV
S3	Digital input S3	Set according to parameter F2.15, and factory set defaults tobe the first one of multistage speed.
S4	Digital input S4	Set according to parameter F2.16, and factory set defaults tobe the second one of multistage speed
S5	Digital input S5	Set according to parameter F2.17, and factory set defaults tobe external RST.
GND	Analogl signal common port	Zero potential of analog signal
AVI	0-10V signal input	0-10V, input resistance:>50KΩ
10V	Frequency Setting potentiometer power source	+10V, the maximum is 10mA
ACI	4-20mA analog input	4-10mA, input resistance: 100Ω
A0	Analog output	Set according to parameter F2.10
RA、RB、RC	Relay output	Set according to parameter F2.20 Contact rating: AC 250V/3A DC 24V/2A

3、Operation

① Panel and Methods

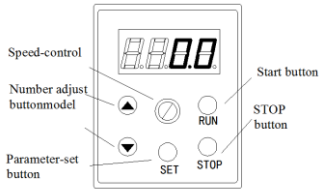

Attention:

If the power is on, it shows 0.0 on the panel. (output frequency)

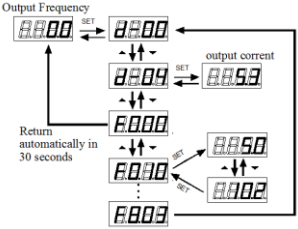

After setting parameter, the way to return the original:

1. When the power is off, make it on again
2. Select the parameter d-00, and click SET.
3. Long press SET key for 3 S.

②Inverter Operation Command Mode

Inverter operation command mode is set by parameter F0.02: There are two kinds of command mode: panel control start / stop and terminal control start / stop:

(1) **Panel control start/stop:** (The factory set defaults to be controlled by panel.)

When you use the panel to control the inverter, you should remember that clicking the green button means start the inverter and clicking the red button means stop. Before any operation, the inverter defaults to start FWD. FWD and REV are set by input terminal S1-S5. (the REV set is 4)

(2) **Terminal control Start/Stop**

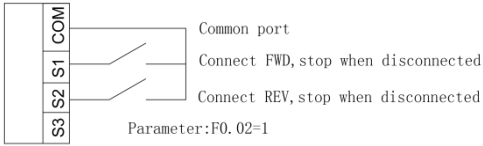

Two-wire control mode 1

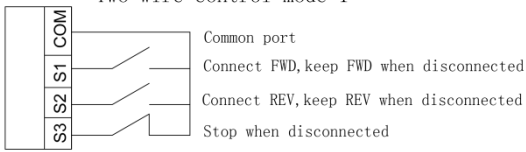

Three-wire control mode 1

③ Inverter Frequency Setting Mode

The inverter frequency setting mode is set by F0.03. When F0.03 = 0, the running frequency is set by potentiometer. When F0.03 = 3, the running frequency is input by AVI (0-10V can be connected with potentiometer); when F0.03 = 5, the running frequency is input by ACI (4-20mA). When F0.03 = 2, it is controlled by the external terminal (the switch value is set to frequency increment / decrement).

4、Parameters list

Para-meter	Name	Factory Value	Set Scope	Instruction
F0- The basic running parameter				
F0.00	Inverter power	According to inverter model	0.1-99.9kw	The current power
F0.01	App version	1.0	1.0-99.9	The current version
F0.02	Running	0	0-2	0: Panel running command

Para-meter	Name	Factory Value	Set Scope	Instruction
	command			1: Terminal running command 2: The communication runs command channels
F0.03	Frequency setting	0	0-6	0: panel potentiometer input 1: number set, adjust by the up/down button on the panel 2: number set, adjust by the terminal up/down 3: AVI analog quantity set (0-10V) 4: combination set (F1.15) 5: ACI set (4-20mA) 6: Communication given
F0.04	Maximum input frequency	50.0Hz	50.0-999Hz	The maximum is the highest frequency value that it is allowed to output, which is also the based standard of the acceleration and deceleration.
F0.05	The upper limit of frequency	50.0Hz	50.0-999Hz	The running frequency cannot be over the upper limit.
F0.06	The lower limit of frequency	0.0Hz	0-the upper limit	The running frequency cannot be less than the lower limit.
F0.07	Solutions when reaching the lower limit	0	0-2	0: running at 0 1: running atlower limit 2: stop
F0.08	Running frequency setting	0	0-the upper limit	the value is original one
F0.09	Digital frequency control	0000	0000-2111	A place: power-down storage 0: save, 1: do not save Ten: keep stop 0: hold, 1: do not hold Hundreds: UF / DOWN negative frequency adjustment 0: invalid, 1: valid Thousands digit: PID, PLC frequency superposition 0: invalid, 1: F0.03 + PID, 2: F0.03 + PLC

Para-meter	Name	Factory Value	Set Scope	Instruction
F0.10	Acceleration time	According to inverter model	0-255s	The time it takes for the inverter to accelerate from zero to the maximum output frequency
F0.11	Deceleration time	According to inverter model	0-255s	The time it takes for the inverter to decelerate from the maximum output frequency to zero
F0.12	Running direction setting	0	0-2	0: FWD 1: REV 2: banned REV
F0.13	V/F Curve setting	0	0-2	0: Wirear curve 1: Square curve 2: Multi-point VF curve
F0.14	Torque Lifting Value	According to the inverter model	0.0～30.0%	Manual torque listing value, if large torque is required, set to 0.0; this value set is the percentage of rated voltage.
F0.15	Torque Lifting Value Cutoff Frequency	15.0Hz	0.0～ 50.0Hz	This setting is the lifting cutoff frequency point for manual torque listing value.
F0.16	Carrier Frequency Setting	According to the inverter model	2.0～ 8.0KHz	For the silent operation, you can increase the carrier frequency to meet the requirements, but increasing the carrier frequency will increase the heat output of the inverter.
F0.17	V/F Frequency Value F1	12.5Hz	0.1-frequenc y value F2	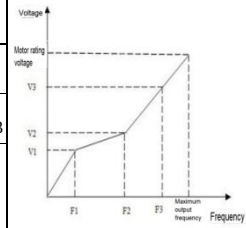
F0.18	V/F Voltage Value V1	25.0%	0.1-voltage value F2	
F0.19	V/F Frequency Value F2	25.0Hz	Frequency value F1-F3	
F0.20	V/F Voltage Value V2	50.0%	Voltage value V1-V3	
F0.21	V/F Frequency Value F3	37.5Hz	Frequency value F2-rated frequency(F 4.03)	
F0.22	V/F Voltage	75%	Voltage	

Para-meter	Name	Factory Value	Set Scope	Instruction
	Value V3		value V2-100.0%(rated voltage) [F4.00]	
F0.23	User's code	0	0-9999	Setting a number except for zero arbitrarily will be effective after 3 minutes or power-off.
F1- Assisted running parameters				
F1.00	DC braking mode when starting	00	0000-0001	Unit: Start mode 0: Start from starting frequency 1: First start DC braking and thenthe starting frequency Tens: Power-off or abnormal restarting mode 0: invalid 1: Started from the starting frequency Hundreds: Reserved Thousands: Reserved
F1.01	DC braking start frequency	1.0Hz	0.0-50.0Hz	After the frequency reaches the defaulting value, start DC braking
F1.02	DC brake voltage when starting	0.0%	0.0-50.0% rating voltage	Apply DC braking voltage value
F1.03	DC braking time	0.0s	0.0-30.0s	The time for applying DC braking
F1.04	Shutdown mode	0	0-1	0: deceleration and stop 1: freely stop
F1.05	DC brake starting frequency when stop	0.0Hz	0.0-the upper limit	After the frequency reaches the defaulting value, start DC braking
F1.06	DC brake voltage when stop	0.0%	0.0-50.0% rating voltage	Apply DC braking voltage value

Para-meter	Name	Factory Value	Set Scope	Instruction
F1.07	DC braking time when stop	0.0s	0.0-30.0s	The time for applying DC braking
F1.08	DC brake waiting time when stop	0.00s	0.00-99.99s	After reaching the braking frequency, delay a little while and then start DC braking
F1.09	FWD jog frequency setting	10.0Hz	0.0-50.0Hz	Set the jog frequency of FWD and REV
F1.10	REV jog frequency setting			
F1.11	Jog acceleration time	According to the inverter model	0.1-255.0s	Set the acceleration and deceleration time
F1.12	Jog deceleration time			
F1.13	Jumping frequency	0.0Hz	0.0-upper limit	Through setting the jumping frequency and scope, make the inverter keep away from the mechanical resonance point of the load
F1.14	Jumping scope	0.0Hz	0.0-10.0Hz	
F1.15	setting model of frequency combination	0	0-7	0: potentiometer +digital frequency 1 1: potentiometer +digital frequency 2 2: potentiometer +AVI 3: Digital frequency 1+AVI 4: Digital frequency 2+AVI 5: Digital frequency 1+ multistage speed 6: Digital frequency 1+ multistage speed 7: potentiometer + multistage speed
F1.16	Programmable operation control (simple PLC operation)	0000	0000-1221	Unit: PLC control 0: invalid, 1: valid Tens: select the running mode 0: single cycle, 1: continuous cycle, 2: keep the final value after single

Para-meter	Name	Factory Value	Set Scope	Instruction
				cycle Hundreds: start mode 0: restart from the first stage 1: start when inverter stops 2: Start when inverter stop and frequency has been initiated. Thousands: Power-off storage selection 0: No storage, 1: Storage
F1.17	Multi-speed frequency 1	5.0Hz	The lower limit- the upper limit	set the frequency of stage 1
F1.18	Multi-speed frequency 2	10.0Hz	The lower limit- the upper limit	set the frequency of stage 2
F1.19	Multi-speed frequency 3	15.0Hz	The lower limit- the upper limit	set the frequency of stage 3
F1.20	Multi-speed frequency 4	20.0Hz	The lower limit- the upper limit	set the frequency of stage 4
F1.21	Multi-speed frequency 5	25.0Hz	The lower limit- the upper limit	set the frequency of stage 5
F1.22	Multi-speed frequency 6	37.5Hz	The lower limit- the upper limit	set the frequency of stage 6
F1.23	Multi-speed frequency 7	50.0Hz	The lower limit- the upper limit	set the frequency of stage 7
F1.24	Running time in stage 1	10.0s	0.0-999.9s	set the running time of stage 1 (unit is chosen by [F1.35], defaulting to be second.)
F1.25	Running time in stage 2	10.0s	0.0-999.9s	set the running time of stage 2 (unit is chosen by [F1.35], defaulting to be second.)
F1.26	Running time in stage 3	10.0s	0.0-999.9s	set the running time of stage 3 (unit is chosen by [F1.35], defaulting to be second.)
F1.27	Running time	10.0s	0.0-999.9s	set the running time of stage 4

Para-meter	Name	Factory Value	Set Scope	Instruction
	in stage 4			(unit is chosen by [F1.35], defaulting to be second.)
F1.28	Running time in stage 5	10.0s	0.0-999.9s	set the running time of stage 5 (unit is chosen by [F1.35], defaulting to be second.)
F1.29	Running time in stage 6	10.0s	0.0-999.9s	set the running time of stage 6 (unit is chosen by [F1.35], defaulting to be second.)
F1.30	Running time in stage 7	10.0s	0.0-999.9s	set the running time of stage 7 (unit is chosen by [F1.35], defaulting to be second.)
F1.31	Acceleration and deceleration time in stages: Choice 1	0000	0000-1111	Unit: acceleration and deceleration time in stage 1, 0~1 Tens: acceleration and deceleration time in stage 2, 0~1 Hundreds: acceleration and deceleration time in stage 3, 0~1 Thousands: acceleration and deceleration time in stage 4, 0~1
F1.32	Acceleration and deceleration time in stages: Choice 2	000	000-111	Unit: acceleration and deceleration time in stage 5, 0~1 Tens: acceleration and deceleration time in stage 6, 0~1 Hundreds: acceleration and deceleration time in stage 7, 0~1 Thousands: Reserved
F1.33	Acceleration time 2	10.0s	0.1~255.0s	set the acceleration and deceleration time 2
F1.34	Deceleration time 2			
F1.35	Time unit selection	000	000~211	Units: PID Procedural time unit Tens: PLC Simple time unit Hundreds: General acceleration and deceleration time unit Thousands: Reserved 0: Each unit is 1 second 1: Each unit is 1 point 1: Each unit is 0.1 seconds
F2- Analog and digital input and output parameter				
F2.00	AVI input	0.00W	0.00～	set the maximum and minimum

Para-meter	Name	Factory Value	Set Scope	Instruction
	voltage with the lower limit		【F2.01】	AVI voltage
F2.01	AVI input voltage with the upper limit	10.0V	【F2.01】～10.00V	
F2.02	Relevant set on the lower limit of AVI	0.0%	-100.0%~100.0%	set the relevant set according to the maximum and minimum frequency, and the relevant set is the percentage of the maximum frequency [F0.05]
F2.03	relevant set on the upper limit of AVI	100.0%		
F2.04	AVI input voltage with the lower limit	0.00Ma	0.00～【F2.05】	set the maximum and minimum ACI input current
F2.05	AVI input voltage with the upper limit	20.00Ma	F2.04】～20.00mA	
F2.06	Relevant set on the lower limit of AVI	0.0%	-100.0%~100.0%	set the relevant set according to the maximum and minimum frequency, and the relevant set is the percentage of the maximum frequency [F0.05]
F2.07	Relevant set on the upper limit of AVI	100.0%		
F2.08	Analog input signal filtering time constant	0.1s	0.1~5.0s	This parameter is used to filter the AVI, ACI and panel potentiometer input signals, for eliminating the influence of interference.
F2.09	Analog input the limitation of shake reduction deviation	0.00V	0.00~0.10V	When the analog input signal fluctuates frequently around the reference value, you can suppress the frequency fluctuation caused by this fluctuation by setting F2.09.
F2.10	Functional selection of A0 analog output terminals	0	0~5	0: Output frequency, 1: Output current, 2: Motor speed, 3: Output voltage, 4: AVI, 5: ACI
F2.11	The lower limit of A0 output	0.00V	0.00~10.00V	set the maximum and minimum value of AO output

Para-meter	Name	Factory Value	Set Scope	Instruction
F2.12	The upper limit of A0 output	10.00V		
F2.13	The function of input terminal S1	3	0~27	0: Set aside the control terminal 1: Forward jog control 2: Reverse jog control 3: Forward control (FWD) 4: Reverse control (REV) 5: Three-wire operation control 6: Free-stop control 7: External stop signal input (STOP) 8: External reset signal input (RST) 9: External fault input 10: Increment frequency command (UP) 11: Decrement frequency command (DOWN) 13: Multi-speed selection S1 14: Multi-speed selection S2 15: Multi-speed selection S3 16: Running command channel compulsive terminal 17: reserved 18: DC braking command when stop 19: Frequency switch to AVI 20: Frequency switch to digital frequency 1 21: Frequency switch to digital frequency 2 22: Reserved 23: Counter clear signal 24: Counter triggering signal 25: Timer clear signal 26: Timer triggering signal 27: Acceleration and deceleration time selection
F2.14	The function of input terminal S2	4	0~27	
F2.15	The function of input terminal S3	13	0~27	
F2.16	The function of input terminal S4	14	0~27	
F2.17	The function of input terminal S5	8	0~27	
F2.18	FWD/REV terminals control model	0	0-3	0: two-wire control model 1 1: two -wire control model 2 2: three-wire control model 1 3: three-wire control model 2
F2.19	Terminal	0	0-1	0: invalid running command when

Para-meter	Name	Factory Value	Set Scope	Instruction
	function test when the power is on			the power is on 1: valid running command when the power is on
F2.20	Functional set of potentiometer R		0~14	0: Idle 1: Inverter is ready for operation 2: Inverter is running 3: Inverter runs at zero speed 4: External fault 5: Inverter fault 6: Frequency / speed arrival signal (FAR) 7: Frequency / speed level detection signal (FDT) 8: The output frequency reaches the upper limit 9: The output frequency reaches the lower limit 10: Inverter overload warning 11: Timer overflow signal 12: Counter detection signal 13: Counter reset signal 14: Assisted motor
F2.21	Reservation			
F2.22	Time-delay when the switch(R) is turned off	0.0s	0.0~255.0s	the time-relay happens when the potentiometer R turn to the change of output
F2.23	Time-delay when the switch is turned on			
F2.24	The scope of examination when the frequency reaches FAR	5.0Hz	0.0Hz~15.0 Hz	The output frequency is within the positive and negative detection width of the set frequency, and the terminal outputs valid signal (low level).
F2.25	FDT-level set value	10.0Hz	0.0Hz~the maximum frequency	
F2.26	FDT hysteresis value	1.0Hz	0.0~30.0Hz	

Para-meter	Name	Factory Value	Set Scope	Instruction
F2.27	UF/DOWN terminal modification speed	1.0Hz/s	0.1Hz~99.9 Hz/s	set the speed of modified frequency when the UP/DOWN terminal set the frequency, et the quantity of frequency's change when the UP/DOWN terminal has short circuit with COM terminal for one second.
F2.28	Pulse input triggering mode setting	0	0~1	0: means the electrical triggering mode 1: means the pulse triggering mode
F2.29	Input terminal effective logical setting	0	0~1	0: means positive logic, et. it is valid when Si terminal is connected with the public terminal but invalid when they are disconnected. 1: means inverse logic, et.It is valid that Si terminal is connected with the public terminal but invalid when they are disconnected.
F2.30	S1 Filter coefficient	5	0~9999	used to set the sensitivity of input terminals, If the digital input terminal is easily disturbed and cause malfunction, increase this parameter to increase the anti-interference ability. However, if the range of setting is too large, the sensitivity of the input terminal will decrease. 1: Represents 2MS scan time unit
F2.31	S2 Filter coefficient	5	0~9999	
F2.32	S3 Filter coefficient	5	0~9999	
F2.33	S4 Filter coefficient	5	0~9999	
F2.34	S5 Filter coefficient	5	0~9999	
F3- PID parameter setting				
F3.00	PID functional setting	1010	0000~2122	Unit: PID adjustment characteristic 0: invalid, 1: negative feedback, 2: positive feedback Tens digit: PID given quantity input channel 0: keyboard potentiometer, 1: number given PID quantity is given by the number, and set by the function code F3.01.

Para-meter	Name	Factory Value	Set Scope	Instruction
				2: Pressure given (MPa, Kg) By setting F3.01, F3.18 given pressure. Hundreds digit: FID feedback input channel 0: AVI, 1: ACI Thousands digit: PID sleep selection 0: invalid, 1: normal hibernation, this method needs to set specific parameters such as F3.10 ~ F3.13. 2: disturbance sleep Same as the parameter setting when the sleep mode is selected as 0, if the PID feedback value is within the range of the F3.14 setting value, the sleep delay time will be maintained and the disturbance sleep will be entered. When the feedback value is less than the wake-up threshold (PID polarity is positive), immediately wake up.
F3.01	The given value is set	0.0%	0.0~100.0%	Use the keyboard to set the given amount of PID control.This function is valid only when the PID given channel selection digit is given (F3.00 ten's digit is 1).
F3.02	Feedback channel benefit- gain	1.00	0.01~10.00	When thefeedback channelis not consistent with the setting cannel, this function can be used to adjust the signal of feedback channel.
F3.03	Proportional gain P	1.00	0.1~5.00	The adjustment speed of PID is set by two parameters, proportional gain P and Integration Time Ti. If you want a higher speed, you should increase the proportional gain P and decrease the integration time; if you want a lower speed, you should decrease the proportional gain P and increase the integration time. Under general conditions, we do not set the derivative time.
F3.04	Integration time Ti	1.00	0.1~50.0s	
F3.05	Derivative time Td	2.0s	0.1~10.0s	

Para-meter	Name	Factory Value	Set Scope	Instruction
F3.06	Sampling period T	0.0s	0.1~10.0s	The larger the sampling period means the slower response but better suppression effect on the interference signal. Generally, it is not set.
F3.07	Deviation limit	0.0s	0.0~20.0%	Deviation limit is the ratio of the given amount and the absolute value which is the deviation between the system feedback amount and the given amount. When the feedback amount is within the deviation limit range, we will not adjust the PID .
F3.08	Closed loop preset frequency	0.0Hz	0.0~the Maximum	The frequency and running time of the inverter before the PID begins to be operated.
F3.09	Holding time of Preset frequency	0.0s	0.0~999.9s	
F3.10	Awaking threshold factor	100.0%	0.0～ 150.0%	If the actual feedback value is greater than the set value and the inverter output frequency reaches the lower limit frequency, the inverter will turn to sleeping state after the delay time defined by F3.12 (ie zero speed operation; the value is the percentage of the PIDsetvalue.)
F3.11	Sober threshold factor	90.0%	0.0～ 150.0%	If the feedback value is less than the set value, the inverter will turn to sleeping state after waiting for the delay time defined by F3.13; this value is a percentage of the PID set value.
F3.12	Delayed sleep	100.0%	0.0~999.9s	set the time-delay of sleeping
F3.13	Delayed awaking	1.0s	0.0~999.9s	set time-delay of awaking
F3.14	Feedback and set pressure deviations when entering	0.5%	0.0~10.0%	The parameters of the function is only effective to the disturbance sleeping mode.

Para-meter	Name	Factory Value	Set Scope	Instruction
	sleep			
F3.15	Burst examination delay time	30.0	0.0~999.9s	set the burst examination delay time
F3.16	High pressure detection threshold	150.0%	0.0~200.0%	When the feedback pressure is greater than or equal to the set value, the squib failure "EPA0" will be reported after the F3.15 squib delay, when the feedback pressure is less than the set value, the squib fault "EPA0" will reset automatically; the threshold is the percentage of the set pressure.
F3.17	Low pressure detection threshold	50.0%	0.0~200.0%	When the feedback pressure is less than the set value, the squib failure "EPA0" will be reported after the F3.15 squib delay, when the feedback pressure is greater than or equal to the set value, the squib fault "EPA0" will reset automatically; the threshold is the percentage of the set pressure.
F3.18	Sensor range	10.0mp	0.00~99.99 (Mpa、Kg)	set the maximum range of sensor
F4- Advanced function parameters				
F4.00	Rated voltage	By model	0～500V	Motor parameter setting
F4.01	Rated current	By model	0.1～999.9A	
F4.02	Rated speed	By model	0～60000Krpm	
F4.03	Rated frequency	50.0Hz	1.0～999.9Hz	
F4.04	Stator resistance	By model	0.001～20.000Ω	Set the motor stator resistance
F4.05	No-load current	By model	0.1～【F4.01】	Set the motor no-load current
F4.06	AVR function	0	0～2	0：invalid，1：always valid 2：Invalid only when decelerating
F4.07	Keep	0	-	Keep

Para-meter	Name	Factory Value	Set Scope	Instruction
F4.08	The frequency of automatic fault reset	0	0～10	When the reset number is set to 0, there is not automatic reset function and it can only be manually reset. 10 means that the number of unlimited, that is means numerous times.
F4.09	Fault automatically reset interval time	3.0s	0.5～25.0s	Set fault automatic reset interval time
F5- Protection function parameters				
F5.00	Protection settings	0001	0000～1211	Unit：Motor overload protection options 0：invalid，1:valid tens：PID feedback break protection 0：invalid，1：Protection action and free downtime hundreds：Keep thousands：Shock suppression options 0：invalid , 1：valid
F5.01	Motor overload protection factor	100%	30%～110%	Motor overload protection factor is the percentage of motor rated current value and inverter rated output current value.
F5.02	Under-voltage protection level	180/360V	150-280 300～480V	This function code stipulates the lower limit voltage of DC bus when the inverter works normally.
F5.03	Deceleration voltage limiting factor	1	0：shut down，1～255	This parameter is used to adjust the ability of the inverter to suppress over-voltage during deceleration.
F5.04	Over-voltage limit level	375/790V	350-380 660～760V	The over-voltage limit level defines the operating voltage at over-voltage stall protection
F5.05	Accelerated current limiting factor	125	0：shut down，1～255	This parameter is used to adjust the inverter's ability to suppress overcurrent during acceleration.
F5.06	Constant current limiting	0	0：shut down，1～	This parameter is used to adjust the inverter's ability to suppress

Para-meter	Name	Factory Value	Set Scope	Instruction
	factor		255	overcurrent during constant speed.
F5.07	Current limit level	200%	100%～250%	The current limit level defines the current limit for automatic current limit operation and respectively its set value is the percentage of the rated current value
F5.08	Feedback disconnection detection value	0.0%	0.0～100.0%	This value is a percentage of PID given amount. When the PID feedback value continues to be less than the feedback disconnection detection value, the inverter will make the corresponding protection action according to the setting of F5.00. When F5.08=0.0%, This value is invalid.
F5.09	Feedback disconnection detection time	10.0s	0.1～999.9s	when the feedback disconnection occurs, the time-delay before the protective action
F5.10	Inverter overload pre-alarm level	120%	120～150%	This is the current threshold of the inverter overload pre-alarm action. its set value is the percentage of inverter rated current
F5.11	Frequency inverter overload pre-alarm delay	5.0s	0.0～15.0s	When inverter output current is continuously greater than overload pre-alarm level (F5.10)，the time-delay before output overload pre-alarm signal
F5.12	jog priority enable	0	0～1	0：invalid 1：when the inverter is operating, jog priority is highest
F5.13	Oscillation suppression factor	30	0～200	When the motor shock，it is need to set the thousands of F5.00 as valid and open the shock suppression function. And then, adjusting it by setting the shock suppression factor. Generally，if the shock amplitude is great，it is need to increase the F5.13 shock suppression factor，when F5.14～F5.16 do not set. If there are special circumstances, F5.13 ~ F5.16 shell be used in
F5.14	Amplitude suppression factor	5	0～12	
F5.15	Oscillation lower limit frequency	5.0Hz	0.0～【F5.16】	
F5.16	Oscillation	45.0Hz	【F5.15】～	

Para-meter	Name	Factory Value	Set Scope	Instruction
	suppression upper limit frequency		【F0.05】	conjunction with each other.
F5.17	By wave limit selection	011	000～111	units：accelerating selection 0：invalid, 1：valid tens：decelerating selection 0：invalid, 1：valid hundreds：constant selection 0：invalid, 1：valid thousands：Keep
F6- Communication parameters (Optional）				
F6.00	Native address	1	0~247	Set the native address, and 0 is the broadcast address.
F6.01	MODBUS communication configuration	0000	0000~0322	LED ones place: Baud rate options 0:9600BPS 1:19200BPS 2:38400BPS LED Tens place: Data format 0: No parity 1: Even parity 2: Odd parity LED Hundreds place: Communication Response 0: Normal response 1: Only respond to the slave address 2: No response 3: Slave does not respond to the free stop command of the host in broadcast mode LED Thousands place: Reserve

Para-meter	Name	Factory Value	Set Scope	Instruction
F6.02	Communication timeout checkout time	10.0s	0.1～100.0s	LED ones place: Baud rate options 0:9600BPS 1:19200BPS 2:38400BPS LED Tens place: Data format 0: No parity 1: Even parity 2: Odd parity LED Hundreds place: Communication Response 0: Normal response 1: Only respond to the slave address 2: No response 3: Slave does not respond to the free stop command of the host in broadcast mode LED Thousands place: Reserve
F6.03	Native response delay	5ms	0~200ms	This function code defines the intermediate interval time between the end of the data frame reception of the frequency converter and the transmission of the response data frame to the host computer. If the response time is less than the system processing time, the system processing time shall prevail.
F6.04	Proportional linkage coefficient	1.00	0.01~10.00	This function code is used to set the weight coefficient of the frequency command of the

Para-meter	Name	Factory Value	Set Scope	Instruction
				frequency converter received through the RS485 interface as the slave. The actual running frequency of the native machine is equal to the value of this function code multiplied by the frequency setting command value received through the RS485 interface. In the linkage control, this function code can set the ratio of the running frequency of multiple frequency converters.
F6.05	Multi-manufacturer agreement selection (reserve)	0	0~3	0: DELTA-M series 1: MD380 series 2: ZC series 3: CHF series Try to be compatible with multi-manufacturer communication protocols depending on the memory capacity
F7- Supplementary function parameters				
F7.00	Counting and timing modes	103	000～303	units：Count arrival process， 0：Single-cycle count, stop output, 1：Single-cycle count, continue to output, 2：Cycle count, stop output 3：Cycle count, continue to output. tens：Keep hundreds：Timing to deal with， 0：Timing to deal with, 1：Single-cycle count, continue to output, 2：Cycle timing, stop output 3：Cycle timing, continue to output。 thousands：Keep
F7.01	Counter reset	1	【F7.02】～	Set the counter reset value

Para-meter	Name	Factory Value	Set Scope	Instruction
	value setting		9999	
F7.02	Counter detection value setting	1	0～【F7.01】	Set the counter detection value
F7.03	Timing setting	0s	0～9999s	Set the timing time
F8- Manage and display parameters				
F8.00	Run monitoring parameters	0	0～26	The main monitoring interface, the default display items. its corresponding figures is the parameters in group D.
F8.01	Shutdown monitoring parameters	1	0～26	The main monitoring interface, the default display items. its corresponding figures is the parameters in group D.
F8.02	Motor speed display factor	1.00	0.01～99.99	It used to calibrate the speed scale display error and has no effect on the actual speed.
F8.03	Parameter initialization	0	0～2	0：No operation 1：Restore factory settings User parameters by model to restore the factory settings。 2：Clear the fault record
F9- Manufacturer parameters				
F9.00	Manufacturer password		1-9999	A special password set by system
F9.01	Model selection	1	0-14	220V: 0：0.4KW 1：0.75KW 2：1.5KW 3：2.2KW 4：4.0KW 5：5.5KW 6：7.5KW 380V: 7：0.4KW 8：0.75KW 9：1.5KW 10：2.2KW 11：3.0KW 12：4.0KW 13：5.5KW 14：7.5KW
F9.02	Dead time	By model	2.5～4.0μS	2.5～4.0μS 0.4～4.0KW 2.8us 5.5KW～22KW 3.2us
F9.03	Software over-voltage detection value	400/810V	0-450V/900V	Over-voltage detection threshold
F9.04	Voltage	1.00	0.80～1.20	Bus voltage value used to calibrate

Para-meter	Name	Factory Value	Set Scope	Instruction
	correction factor			the test
F9.05	Current correction factor	1.00	0.80～1.20	The current value used to calibrate the test
F9.06 ～ F9.09	Keep	0		Keep
F9.10	Special function selection	By model	0-2	units：Cumulative run time clear selection 0：invalid，1：valid tens：By model 0：Universal models（G），1：Light-load models（F），2：Overloaded model（Z） hundreds：Keep。thousands：Keep。

d- Monitoring parameters group			
Para-meter	**name**	**scope**	**Minimum unit**
d-00	Output frequency (Hz)	0.0～999.9Hz	0.1Hz
d-01	Set the frequency (Hz)	0.0～999.9Hz	0.1Hz
d-02	Output voltage (V)	0～999V	1V
d-03	Bus voltage (V)	0～999V	1V
d-04	Output current (A)	0.0～999.9A	0.1A
d-05	Motor speed (Krpm)	0～60000Krpm	1Krpm
d-06	Analog input AVI (V)	0.00～10.00V	0.01V
d-07	Analog input ACI(mA)	0.00～20.00mA	0.01mA
d-08	Analog input AO(V)	0.00～10.00V	0.01V
d-09	Keep	-	-

d-10	Keep	-	-
d-11	PID pressure feedback value	0.00～10.00V/ 0.00～99.99(MPa、Kg)	0.01V/(MPa、Kg)
d-12	Current count value	0～9999	1s
d-13	The current timing value (s)	0～9999s	1s
d-14	Input terminal status (S1-S5)	0～1FH	1H
d-15	Output relay status (R)	0～1H	1H
d-16	Keep	Keep	-
d-17	Software upgrade date (year)	2010～2026	1
d-18	Software upgrade date (day, month)	0～1231	1
d-19	The second fault code	0～19	1
d-20	The most recent fault code	0～19	1
d-21	Output frequency at the latest fault (Hz)	0.0～999.9Hz	0.1Hz
d-22	Output current at the latest fault (A)	0.0～999.9A	0.1A
d-23	Bus voltage during the last failure (V)	0～999V	1V
d-24	Keep	Keep	-
d-25	Total running time of inverter（h）	0～9999h	1h

E- Error code			
Error code	**Name**	**Possible cause of the problem**	**Troubleshooting**
E0C1	Accelerate	Acceleration time is too short	Increase acceleration time

	overcurrent during operation	Inverter power is too small	Use a large power inverter
		V / F curve or torque boost setting is not appropriate	Adjust the V / F curve or torque boost
E0C2	Overcurrent during deceleration	Deceleration time is too short	Extend the deceleration time
		Inverter power is too small	Use a large power inverter
E0C3	Overcurrent in constant operation	Grid voltage is low	Check the input power
		Load is abrupt or abnormal	Check the load or reduce the Load mutation
		Inverter power is too small	Use a large power inverter
EHU1	over-voltage during accelerating operation	Input voltage is abnormal	Check the input power
		Restart the rotating motor	Set to start after DC braking
EHU2	Over-voltage during deceleration	Deceleration time is too short	Extend the deceleration time
		Input voltage is abnormal	Check the input power
EHU3	Over-voltage during constant speed operation	Input voltage is abnormal	Check the input power
EHU4	Over-voltage during shut down	Input voltage is abnormal	Check the power supply voltage
ELU0	Under-voltage in operation	Input voltage is abnormal or the relay is not engaged	Check the power supply voltage or seek service from manufacturers
ESC1	Power module fault	Inverter output short circuit or touch ground	Check the motor wiring
		Inverter transient overcurrent	Reference overcurrent measures
		Abnormal control board or serious interference	Seek service from manufacturers
		Power device is damaged	Seek service from manufacturers
EOL1	Inverter overload	V / F curve or torque boost setting is not appropriate	Adjust the V / F curve and torque boost
		Grid voltage is too low	Check the grid voltage
		Acceleration time is too short	Increase acceleration time

		Motor overload	Select a larger power inverter
EOL2	Motor overload	V / F curve or torque boost setting is not appropriate	Adjust the V / F curve and torque boost
		Grid voltage is too low	Check the grid voltage
		Motor blocked or load mutation is too large	Check the load
		Motor overload protection factor is not set correctly	Set the motor overload protection factor correctly
E-EF	External device failure	External device fault input terminal is closed	Disconnect the external device fault input terminal and clear the fault (pay attention to check the cause)
EPID	PID feedback is disconnected	PID feedback line is loose	Check the feedback connection
		The feedback value is less than the breakage detection value	Adjust the detection input threshold
ECCF	Current detection failure	Current sampling circuit fault	Seek service from manufacturers
		Auxiliary power failure	
EEEP	EEPROM read and write errors	EEPROM failure	Seek service from manufacturers
EPAO	Burst tube failure	The feedback pressure is less than the low-pressure detection threshold or greater than or equal to the high-pressure detection threshold	Check the feedback connection or adjust the detection of high and low-pressure threshold
EPOF	Dual CPU communication failure	CPU communication problem	Seek service from manufacturers

5、Application Cases

（1）Inverter's Control of Constant Pressure and Water Supply

A: Control by Electric Contact Pressure Gauge (the easiest way to control)

Make use of electric pressure gauge pressure to control the pressure of water. Only need to connect two wires, one from the green needles, one from the black needles, were connected to the top two of the three terminals on the electrical contact pressure gauge (some gauges may be different). When the water pressure is low, the black needle will be placed under the green needle, and the inverter is in the accelerated start condition. When the water pressure is high, the black needle will be placed on the green needle, and the inverter is in deceleration stop condition. It is very easy to maintain.

For this inverter, the steps are as follows:

① Pick up the two wires which are from electric contact pressure gauge, one of which should be connected to the S1, and the other one should be connected to the COM terminal (no need to distinguish between positive and negative terminal).

② Set parameter F0.02 = 1 and select external terminal start control.

③Turn the speed control knob on the panel up to the maximum.

④ Inverter parameter setting: F2.13 = 3 (default), F0.10 = 80, F0.11 = 80, F2.19 = 1

The inverter will start automatically start when the power is on. If it does not start, you can use the wire directly connecting S1 and COM. If the inverter cannot start, it indicates thatthere are something wrong with the internal settings of the inverter. If it can be activated, it indicates that there are something wrong with the external electrical contact gauge or wires. It can be checked whether the two wires on the electric contact are connected. It should be turned on when the black pin is placed lower than the green pin, it should be turned off when the black pin is placed above the green pin.

B: Controlled by PID constant pressure water supply control (AVI given)

Use the PID control function which is set inside to adjust and control PID, and the collection of water pressure use pressure sensors or remote pressure gauge. Steps:

① Let the water pressure signal on the remote pressure gauge connect to GND, AVI, 10V. If it is 2-wire pressure sensor, connected to GND, AVI. The voltage feedback value can be seen on parameter d-06.

② If using panel start mode, set parameter F0.02 = 0. If using external terminals to start, set the parameters F0.02 = 1, F2.13 = 3 (default), F2.19 = 1, start signal line connected to S1 and COM.

③ parameter settings: F0.10 = 30, F0.11 = 30 acceleration and deceleration time, can be adjusted according to the actual application

F3.00 = 1011, PID negative feedback, feedback signal is given by AVI, and the

given PID is decided by F3.01.

F3.01, used to set the water pressure, and the range is 0-100. Through this parameter, adjust the level of water pressure, which can be adjusted to 20, and then re-adjusted according to the actual situation.

④the speed of PID control:

F3.03 = 1.00 (default), P value parameter adjustment, P value is higher, adjustment speed is faster

F3.04 = 2.0 (default), I value parameter adjustment, the I value is the higher, the adjustment speed is slower

(2) Two speed given mode control

Equipment requirements: Under FWD mode, use the potentiometer knob to adjust the speed; under REV mode, use the multi-stage operation with low speed.

① Parameter setting: F0.02 = 1, F0.03 = 3, F1.17 = 10 (REV running speed 10HZ)

② Wiring: Three wires of potentiometer should be connected to GND, AVIand+ 10V. FWD signals are connected to S1 and COM and REV signals are connected to S2 and COM, short-circuited between S2 and S3 (set the frequency when REV and select the setting value of multi-speed 1).

(3) Jog control

Equipment that needs jog control:

① Parameter setting: F0.02 = 1, F2.15 = 1 (FWD jog), F2.16 = 2 (REV jog).FWD jogging frequency is given by parameter F1.09, andREV jogging frequency is setby F1.10. Jog acceleration time is set by parameter F1.11, and Jog deceleration time is set by parameter F1.12.

② Wiring: FWD jog signal is connected to COM and S3, REV jog connected to COM and S4.

(4) Insufficient torque at low speed (turning hard)

Adjust parameters F0.14 from small to large gradually. Do not setan extreme value at the beginning because it may produce 0C over-current breakdown.

Adjust parameter to F0.15, which is the frequency of torque cut-off listing value.

(5) Applying on the carving machine which use the Weihong card

When applying on the carving machine which use the Weihong card

① Wiring: There are four wires on the Weihong Card, respectively the public wrie, low-speed wire, medium-speed wire and high-speed wire. These four wires are connected to the inverter COM, S3, S4, S5 respectively.

② Parameter setting: F0.02 = 1, F0.04 = 400 (set according to the motor nameplate),

F0.05 = 400 (set according to the motor nameplate), F1.17 = 100, F1.18 = 150, F1.19 = 200, F1.20 = 250, F1.21 = 300, F1.22 = 350, F1.23 = 400, F2.17 = 15, F2.19 = 1.

F4.03 = 400 (motor rated frequency, set according to the motor nameplate).

③ After the parameter setting is completed, power-off, connect the terminals COM and S1 with wires. Then turn on the machine. (Note: the spindle may rotate after power on, so ensuring safety is important.

Appendix I

Communication protocol

(All of the following data are hexadecimal)

1.RTU mode and format

When the controller is communicating on the Modbus bus in RTU mode, each 8-bit byte in the message is divided into two 4-digit hexadecimal characters. The main advantage of this mode is the density of the transmitted characters at the same baud rate is larger than ASCII mode, and each message must be transmitted continuously.

（1）Format of each byte in RTU mode

Coding system: 8-bit binary, hex 0-9, A-F.

Data bits: 1 start bit, 8 data bits (low bit first), stop bit occupies 1 bit, parity check bit can be selected. (Refer to RTU data frame bit sequence diagram)

Error check area: Cyclic Redundancy Check (CRC)

（2）RTU data frame bit sequence diagram

1.With parity check

Start	1	2	3	4	5	6	7	8	Par	Stop

Without parity check

Start	1	2	3	4	5	6	7	8	Stop

2.Read-write function code description：

Function code	Function Description
03	Read the register
06	Write the register

3.Parameter description of the communication protocol：

Function Description	Address definition	Data meaning description	R/W
Communication control command	2000H	0001H：Shut down	W
		0012H：Forward running	
		0013H：Forward jog running	
		0022H：Reverse running	

		0023H：Reverse jog running	
Communication setting frequency address	2001H	The communication setting frequency range is -10000 to 10000. Note: The communication setting frequency is the percentage relative to the maximum frequency, which ranges from -100.00% to 100.00%)	W
Communication control command	2002H	0001H：External fault input 0002H：Fault reset	W
Read run/stop parameter description	2102H	Setting frequency (two decimal places)	R
	2103H	Output frequency (two decimal places)	R
	2104H	Output current (one decimal place)	R
	2105H	Bus voltage (one decimal place)	R
	2106H	Output voltage (one decimal place)	R
	2107H	Analog input AVI (two decimal places)	R
	2108H	Analog input ACI (two decimal places)	R
	2109H	Current count value	R
	210AH	Motor speed	R
	210BH	Analog input AO (two decimal places)	R

210CH	Reserve	R
210DH	Reserve	R
210EH	PID feedback value (two decimal places)	R
210FH	PID set value (two decimal places)	R
2110H	Reserve	R
2111H	Reserve	R
2112H	The current fault	R
2113H	Current timing value	R
2114H	Input terminal status	R
2115H	Output terminal status	R
2116H	Bit0：Run/stop	R
	Bit1：Forward/reverse Bit2：Jog Bit3：DC backing	R

		Bit4：Reverse Bit5: Overvoltage limit Bit6: Frequency reduction with constant speed Bit7: Overcurrent limit Bit8~9: 00-zero speed/01-acceleration/10-deceleration/11-constant speed Bit10: Overload warning Bit11: Reserve Bit12~13: Run command channel:00 panel/01-terminal/10-communication Bit14~15: Bus voltage status:00-normal/01-undervoltage protection/10-overvoltage protection	R
	2101H	Bit0：Run Bit1：Stop Bit2：Jog Bit3：Forward Bit4：Reverse Bit5～Bit7: Reserve Bit8: Communication given Bit9: Analog signal input Bit10: Communication running command channel Bit11: Parameter lock Bit12: Running Bit13: Command of having jog Bit14~Bit15: Reserve	R

Read the fault code description	2100H	00: No abnormality 01: Module failure 02: Overvoltage 03: Temperature failure 04: Frequency converter overload 05: Motor overload 06: External fault 07~09: Reserve 10: Overcurrent in acceleration 11: Overcurrent in deceleration 12: Overcurrent in constant speed 13: Reserve 14: Undervoltage	R

4.03 read function mode：

Inquiry information frame format:

Address	01H
Function	03H
Starting data address	21H
	02H
Data(2Byte)	00H
	02H
CRC CHK Low	6FH
CRC CHK High	F7H

Analysis of This paragraph of data：

01H is the address of frequency converter

03H is the read function code

2102H is the initial address

0002H is the number of read address, that is, 2102H and 2103H

F76FH is the 16-bit CRC checking code

Response information frame format:

Address	01H
Function	03H
DataNum*2	04H
Data1[2Byte]	17H
	70H
Data2[2Byte]	00H
	00H
CRC CHK	FEH
CRC CHK High	5CH

Analysis of this paragraph of data:

01H is the address of frequency converter
03H is the read function code
04H is the product of the read item *2
1770H is the data of read 2102H (set frequency)
0000H is the data of read 2103H (output frequency)
5CFEH is a 16-bit CRC checking code

5. 06H read function mode

Inquiry information frame format

Address	01H
Function	06H
Starting data address	20H
	00H
Data(2Byte)	00H
	01H
CRC CHK	43H
CRC CHK High	CAH

Analysis of this paragraph of data:

01H is the address of frequency converter
06H is the write function code
2000H is the address of control command

0001H is the stop command
43CAH is a 16-bit CRC checking code
Response information frame format:

Address	01H
Function	06H
Starting data	20H
	00H
Number of Data	00H
	01H
CRC	43H
CRC	CAH

Analysis of this paragraph of data: If the settings are correct, return the same input data.

Service Delivers value, and quality creates brilliance

Dear every user:

Thank you for using our products. In order to ensure that you can receive the best after-sales service, please read the following terms, and finish related matters.

1.Scope of Product Guarantee

Any breakdown occurring under thenormal use of product is within the scope of guarantee.

2.The Period of Guarantee

This product is guaranteed for twelve months, from the date of selling out of the factory. After the guarantee period, it is available to get long-term technical support services on product.

3.Beyond the Scope of Guarantee

Any violation of the requirements, due to human factors, natural disasters or water permeation, external damage, harsh environments etc., as well as unauthorized removal, modification and repair, will be considered as a waiver of guarantee service.

4.Buying Products from the Intermediary Businessmen

The users who buy products from the distributor and agent should contact the distributor or agent when breakdown happen on the product.

Please save this manual for future use if necessary.

Number:XM-H0123
Finished on July 2020