HARS

www. hars-vfd.com

4XH32QB151210-321

Small Universal Frequency Converter

Operation Manual

220V 0.4KW - 5.5KW

400V 0.4KW - 11.0KW

■ Please read this Manual carefully and understand the content, so as to correctly install and use the converter.

■ Please give this Manual to the end user and properly keep it.

■ The technical specifications of the converter is subject to change without prior notice.

2RI2022-4.0 Version A
English
Starting date: June 11, 2024
Ref. No.: XM-H0125

V4.0

Solemn Statement

Thank you for using this frequency converter. Before use, please read this Manual carefully to familiarize yourself with the safety precautions of this product.

Safety Precautions:

1. Before wiring, please check whether the input power is off.
2. The wiring should be carried out by professional electricians.
3. The grounding terminal must be grounded.
4. After the completing the emergency stop circuit wiring, please check whether the emergency stop action is effective.
5. Do not connect the output line of the frequency converter to the housing. Do not short circuit the output line.
6. Please confirm whether the voltage of the AC main circuit power supply is consistent with the rated voltage of the converter.
7. Do not carry out voltage resistance test on the frequency converter.
8. Please connect the brake resistor according to the wiring diagram.
9. Do not connect the power cord to the output terminals U, V and W.
10. Do not connect the contactor to the output circuit.
11. Be sure to install the protective housing before powering on. Be sure to disconnect the power supply before removing the housing.
12. Do not place the frequency converter with reset retry function near the mechanical equipment. Because it will suddenly restart when the alarm stops.
13. It can alarm and reset only after confirming that the running signal is cut off. If it alarms and resets in the running signal state, the frequency converter may start suddenly.
14. Do not touch the terminal of frequency converter. There is high voltage on the terminal, which is very dangerous.
15. Do not change wiring and disassemble terminals during power-on.
16. The inspection and maintenance should be carried out after the main circuit power supply is cut off.
17. Please do not modify the frequency converter without permission.

1. Technical data

Rated data of frequency converter					
Model	Power	Input power	Output power (A)	Dimensions L×W×H (mm)	Mounting size L×W - Mounting screws (mm)
0.4S1-220V	0.4KW	Single-phase AC 200V-240V 50Hz/60Hz	2.1	170*79*127	160*60.5-M5
0.75S1-220V	0.75KW		3.8		
1.5S1-220V	1.5KW		7		
2.2S1-220V	2.2KW		9.0	187*86*144	173*68-M4
3.0S1-220V	3.0KW		13	216*101*151	204*83.5-M4
4.0S1-220V	4.0KW		15	237*111*168	221*93.5-M5
5.5S1-220V	5.5KW		20		
0.4S3-220V	0.4KW	Three-phase AC 200V-240V 50Hz/60Hz	2.1	170*79*127	160*60.5-M5
0.75S3-220V	0.75KW		3.8		
1.5S3-220V	1.5KW		7		
2.2S3-220V	2.2KW		9.0	187*86*144	173*68-M4
3.0S3-220V	3.0KW		13	216*101*151	204*83.5-M4
4.0S3-220V	4.0KW		15	237*111*168	221*93.5-M5
5.5S3-220V	5.5KW		20		
0.4G3-380V	0.4KW	Three-phase AC 340V-440V 50Hz/60Hz	1.5	170*79*127	160*60.5-M5
0.75G3-380V	0.75KW		2.1		
1.5G3-380V	1.5KW		3.8		
2.2G3-380V	2.2KW		5.1	187*86*144	173*68-M4
3.0G3-380V	3.0KW		7.1		
4.0G3-380V	4.0KW		9.0	216*101*151	204*83.5-M4
5.5G3-380V	5.5KW		12.6		
7.5G3-380V	7.5KW		16.1	237*111*168	221*93.5-M5
11.0G3-380V	11.0KW		25.0	249*143*172	237*130-M5

Selection of braking resistor				
Model	Power	Input power	Power of braking	Resistance value of braking resistor

0.4S1-220V	0.4KW	Single-phase AC 200V-240V 50Hz/60Hz	100 W	250 Ω
0.75S1-220V	0.75KW		100 W	200 Ω
1.5S1-220V	1.5KW		300 W	100 Ω
2.2S1-220V	2.2KW		300 W	100 Ω
4.0S1-220V	4.0KW		1000 W	75 Ω
5.5S1-220V	5.5KW		1000 W	75 Ω
0.4S3-220V	0.4KW	Three-phase AC 200V-240V 50Hz/60Hz	100 W	250 Ω
0.75S3-220V	0.75KW		100 W	200 Ω
1.5S3-220V	1.5KW		300 W	100 Ω
2.2S3-220V	2.2KW		300 W	100 Ω
4.0S3-220V	4.0KW		500 W	75 Ω
5.5S3-220V	5.5KW		1000 W	75 Ω
0.4G3-380V	0.4KW	Three-phase AC 340V-440V 50Hz/60Hz	100 W	750 Ω
0.75G3-380V	0.75KW		100 W	750 Ω
1.5G3-380V	1.5KW		300 W	400 Ω
2.2G3-380V	2.2KW		300 W	250 Ω
4.0G3-380V	4.0KW		500 W	150 Ω
5.5G3-380V	5.5KW		800 W	100 Ω
7.5G3-380V	7.5KW		1000 W	75 Ω
11.0G3-380V	11.0KW		1200 W	50 Ω

2. Installation and wiring

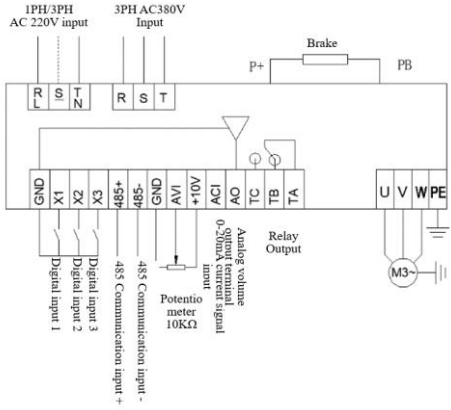

Purpose of the terminals		
Terminal	**Purpose**	**Design description**
R, S, T	Converter power supply: 380V converter is to connect R, S, T 220V converter is to connect R, S or R, T (according to the terminal label)	The front end of the input power supply of the converter should use the air switch as the overcurrent protection device. If the leakage protection switch is added, in order to prevent the misoperation of the

		leakage switch, please select the equipment with a sensitivity of more than 200mA and an operation time of more than 100ms.
U, V, W	Converter output, to connect the motor	In order to reduce leakage current, the motor connection line should not exceed 50 meters.
PE	Grounding	Frequency converter should be well grounded.
X1	Digital input X1	Set by parameter F5.02, the factory default is forward
X2	Digital input X2	Set by parameter F5.03, the factory default is reverse
X3	Digital input X3	Set by parameter F5.04, the factory default is multi-speed first
X4	485 Communication input +	The factory default is 485+
X5	485 Communication input -	The factory default is 485-
GND	Signal common terminal	Zero potential of input and output signal
AVI	0-10 signal input	0-10V
10V	Power supply for frequency setting potentiometer	+10V, 10mA Max
ACI	4-20 mA analog input	4-20mA
AO	Analog output signal	Set by parameter F6.10
TA, TB, TC	Relay output	Set by parameter F5.07 Contact capacity: AC 250V/3A DC 24V/2A

3. Commissioning and operating

(1) Operation panel and operation method

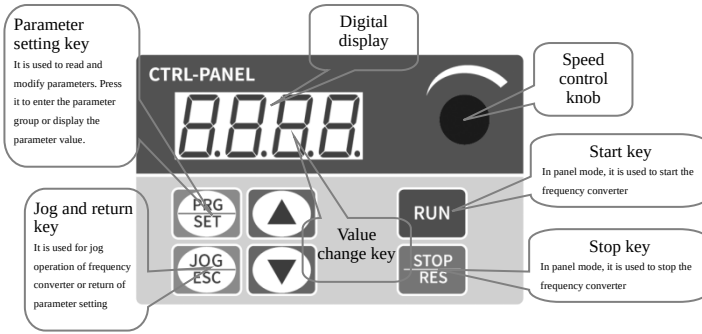

Method of returning to the original interface after setting parameters:
1. Power off and then power on again. 2. Select d-00 and press SET. 3. Long press the SET key.

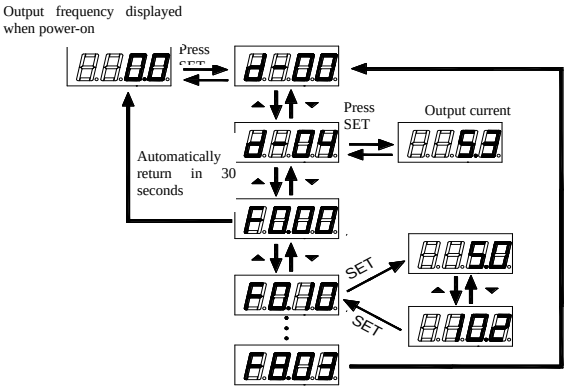

(2) Set the run command mode of

The run command mode of frequency converter is set by parameter F0.02: There are two start-stop modes: panel control start-stop mode and terminal control start-stop mode

:

(1) Panel control start-stop mode: (F0.02=0)

To use the panel control start-stop frequency converter, press the green button on the panel to start, and the red button to stop. The converter starts with forward run by default, and the forward or reverse run needs to be set through the input terminal X1-X5 (the reverse setting is 4).

(2) Terminal control start-stop mode: (F0.02=1)

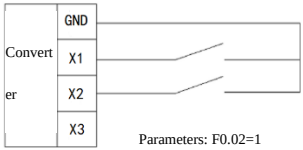

Parameters: F0.02=1

Two-wire control mode 1

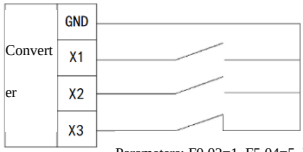

Parameters: F0.02=1, F5.04=5, F5.00=2

Three-wire control mode 1

(3) Selection of frequency setting mode

The frequency setting mode of the converter is set by parameter F0.03. When F0.03=4, the running frequency is set by potentiometer; When F0.03=2, the running frequency is input by AVI (0-10V potentiometer can be connected externally); When F0.03=3, the running frequency is input by ACI (4-20mA); When F0.03=1, it is controlled by the external terminal (the switching value is set to be increasing/decreasing frequency).

4. Table of parameters

Parameters	Name	Factory default value	Setting range	Description
Group F0 - Basic running parameters				
F0.00	Converter power	Based on the model	0.0-99.9kw	Current converter power
F0.01	Control mode	0	0-1	0: V/F control 1: open-loop vector
F0.02	Run command selection	0	0-2	0: Panel run command 1: Terminal run command 2: Communication run command
F0.03	Primary frequency source X selection	4	0-8	0: Digital setting (preset frequency F0-07, UP/DOWN, modifiable according to the value of F0-07, no memory of power failure) 1: Digital setting (preset frequency F0-07, UP/DOWN, modifiable according to the value of F0-07, memory of power failure) 2: AI1(AVI) 3: AI2(ACI) 4: AI3 (keyboard potentiometer) 5: Multi-speed instruction 6: Simple PLC 7: PID 8: Communication
F0.04	Auxiliary frequency source Y selection	0	0-8	Same as F0.03
F0.05	Operation of primary and auxiliary frequencies	0	0-3	0：primary + auxiliary 1：primary - auxiliary 2: greater of the two values 3: smaller of the two values
F0.06	Frequency source	0	0-4	0: Primary frequency source X 1: Operation result of primary and

Parameters	Name	Factory default value	Setting range	Description
	selection			auxiliary frequencies (determined by operation F0.05) 2: switch between primary frequency source X and auxiliary frequency source Y 3: switch between primary frequency source X and operation result of primary and auxiliary frequencies 4: switch between auxiliary frequency source Y and operation result of primary and auxiliary frequencies
F0.07	Frequency digit setting	50.00Hz	0-Maximum frequency	The set value is the given initial value of the frequency digit
F0.08	Maximum output frequency	50.00Hz	Upper limit frequency - 400.0Hz	The maximum output frequency is the maximum frequency allowed by the converter, which is the benchmark for acceleration/deceleration setting.
F0.09	Upper limit frequency	50.00Hz	Lower limit frequency - Maximum output frequency	The running frequency cannot exceed such frequency
F0.10	Lower limit frequency	0.00Hz	0- Upper limit frequency	The running frequency cannot be lower than such frequency
F0.11	Treatment when reaching the lower limit frequency	0	0-2	0: Zero-speed running 1: Run at the lower limit frequency 2: Shut down
F0.12	First acceleration time	10.0s	0.1～999.9s	Time required for the converter to accelerate from zero to maximum output frequency
F0.13	First deceleration time	10.0s	0.1～999.9s	Time required for the converter to decelerate from maximum output frequency to zero
F0.14	Running direction	0	0-2	0: forward, 1: reverse, 2: reverse prohibition

Parameters	Name	Factory default value	Setting range	Description
				This selection between forward and reverse is valid only when the command comes from the panel. The reverse prohibition is valid no matter where the command comes from.
F0.15	User password	0	0～9999	The password takes effect when a non-zero digit is set. If 0000 is set after decryption, the password function is disabled.
F0.16	Software version	xx.xx	01.00-99.99	Current software version. (Some parameters in this Manual match software versions after 2.35)
F0.17	Parameter initialization	0	0-3	0: no operation 1: Restore factory default value (excluding motor parameters) 2: Fault clearing 3: Restore all parameters to factory default values (including motor parameters)
F0.18	Retain			
F0.19	Frequency decimal point	2	1~2	(This parameter matches the software after versions 2.88 and 2.89) 1: 0.1 Hz (maximum frequency can be set to 4000 Hz, changed to one decimal place, all other frequency-related parameters will be adjusted to 0) 2: 0.01 Hz (maximum frequency can be set to 400.0 Hz)
F0.20	Holding of digital set stop	1	0~1	0: No hold 1: Hold
Group F1 - V/F control parameter				
F1.00	V/F curve setting	0	0-4	0: Linearity curve 1: Square curve 2: 1.5 power curve 3: 1.2 power curve 4: Multi-point VF curve

Parameters	Name	Factory default value	Setting range	Description
F1.01	Torque lift	Based on the model	0.0~30.0%	Manual torque lift. This value is set as a percentage of the rated voltage of the motor. If it is 0, it will be switched to automatic torque lift.
F1.02	Torque lift cutoff frequency	15.00Hz	0.0~50.00Hz	The cutoff frequency of manual torque lift
F1.03	Carrier frequency setting	Based on the model	2.0～16.0KHz	Raising the carrier frequency can reduce the noise, but it will increase the calorific value of the converter.
F1.04	V/F frequency value F1	12.50Hz	0.01 ~ frequency value F2	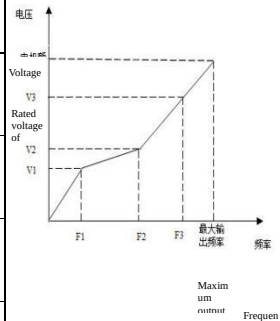
F1.05	V/F voltage value V1	25.0%	0.0 ~ voltage value V2	
F1.06	V/F frequency value F2	25.00Hz	Frequency value F1 ~ frequency value F3	
F1.07	V/F voltage value V2	50.0%	Voltage value V1 ~ voltage value V3	
F1.08	V/F frequency value F3	37.50Hz	Frequency value F2 ~ motor rated frequency	
F1.09	V/F voltage value V3	75.0%	Voltage value V2 ~ 100.0% (motor rated voltage)	
F1.10	Torque lifting mode	7	0~7	
F1.11	Braking ratio	90%	0～100%	Braking ratio of braking resistor

Parameters	Name	Factory default value	Setting range	Description
F1.12	Torque compensation gain	100%	0～300%	
F1.13	VF overexcitation gain	25%	0～200%	
F1.14	Oscillation suppression mode	3	0～4	In V/f mode, most motors experience speed oscillation and current oscillation at low frequencies, which may lead to overcurrent in the inverter. Enabling oscillation suppression can eliminate these oscillations. 0: Disabled 1: Reserved 2: Reserved 3: Enabled 4: Reserved
F1.15	VF separated voltage source	0	0～9	0: Digital input (F1.16) 1: AI1 2: AI2 3: Keyboard potentiometer 4: Reserved 5: Multi-stage speed 6: PLC 7: PID 8: Communication input 9: Current closed-loop
F1.16	VF separated voltage source digit setting	0	0 ~ motor rated voltage	
F1.17	VF separated voltage rising time	0.0	0.0~1000.0	
F1.18	VF separated voltage decelerating time	0.0	0.0~1000.0	
F1.19	VF separation stop mode selection	0	0~1	

Parameters	Name	Factory default value	Setting range	Description
F1.20	VF separation current closed loop control setting	100	0 ~ current limiting level	
F1.21	Retain			
Group F2 - Vector control parameter				
F2.00	Velocity loop low speed Kp	20	1～100	
F2.01	Velocity loop low speed Ki	0.50	1～10.00	
F2.02	Velocity loop high speed Kp	10	1～100	
F2.03	Velocity loop high speed Ki	1.00	1～10.00	
F2.04	Velocity loop low speed frequency calculation switch point	10.00Hz	Lower limit frequency ~ Maximum frequency	
F2.05	Velocity loop high speed frequency calculation switch point	30.00Hz	Lower limit frequency ~ Maximum frequency	
F2.06	Motor slip compensation gain	0%	0～100.0%	
F2.07	Retain			
F2.08	Retain			
F2.09	Retain			
F2.10	Current loop Kp	2000	0～60000	
F2.11	Current loop Ki	1300	0～60000	

Parameters	Name	Factory default value	Setting range	Description
F2.12	Retain			
F2.13	Retain			
F2.14	Open-loop vector slip compensation gain	100%	0～200%	
F2.15	Retain			
F2.16	Retain			
F2.17	Retain			
F2.18	Retain			
F2.19	Speed control (drive) torque upper limit digit setting	150.0%	0～200.0%	
F2.20	Maximum torque coefficient in field-weakening region	100%	50～200%	
F2.21	M-axis current loop scale coefficient	5	5～300	
F2.22	M-axis current loop integral coefficient	0	0～65535	
F2.23	Open-loop vector velocity loop filtering time constant	0.25	0～1.00	
F2.24	Open-loop vector torque lift	100	0～500	
F2.25	Open-loop	20.00Hz	Lower limit	

Parameters	Name	Factory default value	Setting range	Description
	vector torque lift cutoff frequency		frequency ~ Maximum frequency	
F2.26	Torque set filter	28	0～31	
F2.27	Maximum field-weakening voltage overmodulation coefficient	105%	0～110%	
F2.28	Flux observation compensation coefficient	100%	0～100%	
F2.29	Flux observation filter coefficient	300	0～2000	
F2.30	T-axis current closed-loop coefficient	0	0～500	
F2.31	Torque limiting mode	0	0~1	
F2.32	Retain			
F2.33	Retain			
Group F3 - Auxiliary running parameters				
F3.00	Starting mode	0	0-1	0: Start by the start-up frequency 1: Start by the start-up frequency after DC braking
F3.01	Start-up frequency	0.50Hz	0.50～20.00Hz	Initial frequency at which the converter is started
F3.02	Start-up frequency holding time	0	0.0~60.0s	Start-up frequency running time

Parameters	Name	Factory default value	Setting range	Description
F3.03	Start DC braking current	0.0%	0.0~100%	Value of the current that applies DC braking When the rated current of the motor is less than or equal to 80% of the rated current of the frequency converter, the current value is the percentage base value relative to the rated current of the motor; When the rated current of the motor is more than 80% of the rated current of the frequency converter, the current value is the percentage base value relative to 80% of the rated current of the frequency converter.
F3.04	Start DC braking time	0.0s	0.0~60.0s	Duration that applies DC braking
F3.05	Stop mode	0	0～2	0: Stop in deceleration mode, 1: Stop in deceleration mode + DC braking 2: Stop in free mode
F3.06	Starting frequency of stop DC braking	0.00Hz	0.00 ~ Upper limit frequency	DC braking starts when the frequency reaches the preset frequency
F3.07	Stop DC braking current	0.0%	0.0~100%	Value of the current that applies DC braking Same as the start DC braking
F3.08	Stop DC braking time	0.0s	0.0~30.0s	Duration that applies DC braking
F3.09 ～ F3.15	Retain			
F3.16	Function of STOP/RESET key	1	0-1	0: No state 1: Enabled in any situation
Group F4 - Auxiliary running parameters 2				

Parameters	Name	Factory default value	Setting range	Description
F4.00	Forward jog frequency setting	10.00Hz	0.00～50.00Hz	To set forward and reverse jog frequency
F4.01	Reverse jog frequency setting			
F4.02	Jog acceleration time	Based on the model	0.1～999.9s	To set jog acceleration/deceleration time
F4.03	Jog deceleration time			
F4.04	Second acceleration time	10.0s	0.1～999.9s	
F4.05	Second deceleration time	10.0s	0.1～999.9s	
F4.06	Multi-function button	1	0~3	0: Jog operation; 1: Jog operation, highest priority; 2: Current motor direction reversed; 3: Forward/reverse switching;
F4.07	Hopping frequency	0.00Hz	0.0 ~ Upper limit frequency	By setting the hopping frequency and range, the frequency converter can avoid the mechanical resonance point of the load.
F4.08	Hopping range	0.00Hz	0.0~10.0Hz	
F4.09	Hopping frequency 2	0.00Hz	0.0 ~ Upper limit frequency	
F4.10	Hopping range 2	0.00Hz	0.0~10.0Hz	
F4.11	Hopping frequency 3	0.00Hz	0.0 ~ Upper limit frequency	
F4.12	Hopping range 3	0.00Hz	0.0~10.0Hz	
F4.13	Hopping	0.00Hz	0.0 ~ Upper	

Parameters	Name	Factory default value	Setting range	Description
	frequency 4		limit frequency	
F4.14	Hopping range 4	0.00Hz	0.0~10.0Hz	
F5 group - digital input and output parameters				
F5.00	FWD/REV Terminal control mode	0	0-3	0: Two-wire control mode 1 1: Two-wire control mode 2 2: Three-wire control mode 1 3: Three-wire control mode 2
F5.01	Terminal function test when power on	0	0-1	0: Terminal run command is invalid when power on 1: Terminal run command is valid when power on
F5.02	Input terminal X1 function	3	0～27	0: No function 1: Forward jog control 2: Reverse jog control 3: Forward control (FWD) 4: Reverse control (REV) 5: Three-wire running control 6: Free stop control 7: External stop signal input (STOP) 8: External reset signal input (RST) 9: External fault normally open input 10: Frequency up command (UP) 11: Frequency down command (DOWN) 12: Multi-speed selection S1 13: Multi-speed selection S2 14: Multi-speed selection S3 15: The run command channel is forced to be the terminal 16: Retain 17: Stop DC braking command 18: Frequency source switch (F0.06) 19: Retain 20: Retain 21: Retain 22: Counter reset signal (Fb.10 counting function) 23: Counter trigger signal (Fb.10
F5.03	Input terminal X2 function	4	0～27	
F5.04	Input terminal X3 function	12	0～27	

Parameters	Name	Factory default value	Setting range	Description
				counting function) 24: Timer reset signal (Fb.10 timing function) 25: Timer trigger signal (Fb.10 timing function) 26: Acceleration/deceleration time selection (switch between acceleration/deceleration time 1 and acceleration/deceleration time 2)
F5.05	Input terminal X4 function (Communication version 485+)	13	0～27	Retain
F5.06	Input terminal X5 function (Communication version 485-)	8	0～27	Retain
F5.07	Relay R output function setting	5	0～14	0: No function 1: The frequency converter is ready for running 2: The frequency converter is running 3: The frequency converter is running at zero speed 4: Stop due to external fault 5: Converter fault 6: Frequency/velocity arrival signal (FAR) 7: Frequency/velocity detection signal (FDT) 8: Output frequency reaching the upper limit 9: Output frequency reaching the lower limit 10: Converter overload alarm 11: Timer overflow signal (relay output when reaching the set time of Fb.13) 12: Counter detection signal (relay output when the counter value reaches the counter detection value of FB12) 13: Counter reset signal (retain)

Parameters	Name	Factory default value	Setting range	Description
				14: Retain
F5.08	R close delay	0.0s	0.0～999.9s	Delay from change in relay R state to the change in output
F5.09	R Disconnect delay			
F5.10	Frequency reaches the FAR detection range	5.00Hz	0.00Hz～15.00Hz	When the output frequency is within the positive and negative detection range of the set frequency, the terminal outputs an effective signal (low level).
F5.11	FDT set value	10.00Hz	0.00Hz ~ Upper limit frequency	
F5.12	FDT lagged value	1.00Hz	0.00～30.00Hz	
F5.13	UF/DOWN terminal modification rate	1.00Hz/s	0.10Hz～200.00Hz/s	To set the frequency modification rate at the set frequency of UP/DOWN terminal, that is, the size of the frequency change when the UP/DOWN terminal and COM terminal are short connected for one second.
F5.14	Retain			
F5.15	Input terminal valid logic setting (X1 ~ X5)	0	0～31	Bit0 ~ Bit4 correspond to X1 ~ X5 respectively 0: It means positive logic, that is, the connection between Xi terminal and common terminal is valid, and the disconnection is invalid 1: It means negative logic, that is, the connection between Xi terminal and common terminal is invalid, and the disconnection is valid
F5.16	X1 filter coefficient	5	0～9999	It is used to set the sensitivity of the input terminal. If the digital input terminal is susceptible to interference and causes misaction, this parameter value can be increased to enhance the anti-interference ability, but it will lead to poor sensitivity of the input terminal if the value is too large. 1: It represents 2MS scan time unit
F5.17	X2 filter coefficient	5	0～9999	
F5.18	X3 filter coefficient	5	0～9999	
F5.19	X4 filter coefficient	5	0～9999	

Parameters	Name	Factory default value	Setting range	Description
F5.20	X5 filter coefficient	5	0～9999	
Group F6 - Analog input and output functions				
F6.00	AVI input lower limit voltage	0%	0.00～100.0%	To set AVI lower limit voltage
F6.01	AVI input upper limit voltage	100.0%	0.00～100.0%	To set AVI upper limit voltage
F6.02	Corresponding setting of AVI lower limit	0.0%	-100.0%～100.0%	To set the corresponding setting of AVI lower limit, which corresponds to the percentage of the maximum frequency.
F6.03	Corresponding setting of AVI upper limit	100.0%	-100.0%～100.0%	To set the corresponding setting of AVI upper limit, which corresponds to the percentage of the maximum frequency.
F6.04	ACI input lower limit current	0.0%	0.00～100.0%	To set ACI input lower limit current
F6.05	ACI input upper limit current	100.0%	0.00～100.0%	To set ACI input upper limit current
F6.06	Corresponding setting of ACI lower limit	0.0%	-100.0%～100.0%	To set the corresponding setting of ACI lower limit, which corresponds to the percentage of the maximum frequency.
F6.07	Corresponding setting of ACI upper limit	100.0%	-100.0%～100.0%	To set the corresponding setting of ACI upper limit, which corresponds to the percentage of the maximum frequency.
F6.08	Analog input signal filtering time constant	0.1s	0.1～5.0s	This parameter is used to filter the input signals of AVI, ACI and panel potentiometer to eliminate the influence of interference.
F6.09	Analog input anti-vibration deviation limit	0	0.00～100.0%	When the analog input signal fluctuates frequently around a given value, this parameter can be set to suppress the frequency fluctuation caused by such signal fluctuation.
F6.10	AO analog output terminal	0	0～5	0: Output frequency, 0 ~ Maximum frequency

Parameters	Name	Factory default value	Setting range	Description
	function selection			1: Set frequency, 0 ~ Maximum frequency 2: Output current, 0~ 2 times rated current 3: Output voltage, 0~ 2 times rated voltage 4: AVI, 0~10V 5: ACI, 0~20mA
F6.11	AO functional lower limit	0.0	0.0~100.0%	To set the functional upper/lower limit of AO selection
F6.12	AO functional upper limit	100.0%		
F6.13	AO output lower limit	0.0		To set AO output upper/lower limit
F6.14	AO output upper limit	100.0%		
F6. 15	Panel potentiometer input lower limit voltage	10. 9%	0. 00～ 100. 0%	Set panel potentiometer lower limit voltage.
F6. 16	Panel potentiometer input upper limit voltage	96. 0%	0. 00～ 100. 0%	Set panel potentiometer upper limit voltage.
F6. 17	Panel potentiometer lower limit corresponding setting	0. 0%	-100. 0%～ 100. 0%	Set panel potentiometer lower limit corresponding setting, this setting corresponds to the percentage of the maximum frequency.
F6. 18	Panel potentiometer upper limit corresponding setting	100. 0%	-100. 0%～ 100. 0%	Set panel potentiometer upper limit corresponding setting, this setting corresponds to the percentage of the maximum frequency.
F6. 19	Panel potentiometer anti-jitter deviation limit	3. 5%	0. 00～ 100. 0%	When the panel potentiometer experiences frequent fluctuations near the set value, this parameter can be set to suppress the frequency fluctuations caused by these fluctuations.

Parameters	Name	Factory default value	Setting range	Description
Group F7 - Program running parameters (PLC)				
F7.00	Multi-speed frequency 1	5.00Hz	Lower limit frequency ~ upper limit frequency	To set speed 1 frequency
F7.01	Multi-speed frequency 2	10.00Hz	Lower limit frequency ~ upper limit frequency	To set speed 2 frequency
F7.02	Multi-speed frequency 3	15.00Hz	Lower limit frequency ~ upper limit frequency	To set speed 3 frequency
F7.03	Multi-speed frequency 4	20.00Hz	Lower limit frequency ~ upper limit frequency	To set speed 4 frequency
F7.04	Multi-speed frequency 5	25.00Hz	Lower limit frequency ~ upper limit frequency	To set speed 5 frequency
F7.05	Multi-speed frequency 6	37.50Hz	Lower limit frequency ~ upper limit frequency	To set speed 6 frequency
F7.06	Multi-speed frequency 7	50.00Hz	Lower limit frequency ~ upper limit frequency	To set speed 7 frequency
F7.07	Programmable running control (simple PLC running)	0	0～2	0: Single cycle 1: Continuous cycle 2: Maintain the final value after single cycle
F7.08	Stop memory selection	0	0~1	0: Stop without memory 1: Stop with memory
F7.09	Power off memory selection	0	0~1	0: power off without memory 1: power off with memory

Parameters	Name	Factory default value	Setting range	Description
F7.10	T1 running time	10.0s	0.0～999.9s	To set speed 1 running time
F7.11	T2 running time	10.0s	0.0～999.9s	To set speed 2 running time
F7.12	T3 running time	10.0s	0.0～999.9s	To set speed 3 running time
F7.13	T4 running time	10.0s	0.0～999.9s	To set speed 4 running time
F7.14	T5 running time	10.0s	0.0～999.9s	To set speed 5 running time
F7.15	T6 running time	10.0s	0.0～999.9s	To set speed 6 running time
F7.16	T7 running time	10.0s	0.0～999.9s	To set speed 7 running time
F7.17	T1 running mode	0	0~3	0: Forward running, select acceleration time 1 1: Forward running, select acceleration time 2 2: Reverse running, select acceleration time 1 3: Reverse running, select acceleration time 2
F7.18	T2 running mode	0		
F7.19	T3 running mode	0		
F7.20	T4 running mode	0		
F7.21	T5 running mode	0		
F7.22	T6 running mode	0		
F7.23	T7 running mode	0		
F7.24	Current running phase (retain)			
F7.25	Current running time (retain)			
F7.26	Multi-speed is in priority	1	0~1	0: No priority 1: Multi-speed is in priority, priority

Parameters	Name	Factory default value	Setting range	Description
				level is lower than jog
Group F8 - PID parameters				
F8.00	PID control characteristics	0	0~1	0: Positive effect 1: Negative effect
F8.01	PID given quantity selection	0	0~3	0: digit setting 1: keyboard potentiometer setting 2: AVI input 3: ACI input
F8.02	PID feedback quantity selection	0	0~1	0: AVI input 1: ACI input
F8.03	PID digit setting	3.0	PID range lower limit ~ PID range upper limit	The given value when PID given source is digit setting
F8.04	PID command acceleration/deceleration time	0.0	0.00～100.0s	
F8.05	PID bias setting	0.0	0~100.0%	
F8.06	PID bias holding time	0.0	0~6000.0s	
F8.07	Upper limit of PID bias	100.0	0~100.0%	
F8.08	Lower limit of PID bias	0.0	00.0% ~ 100.0% (Maximum frequency)	
F8.09	Proportional gain	25.00	0.00~600.00	
F8.10	Integral time	1.0	0: No integral 0.1~100.0s	
F8.11	Derivative time	0.00	0.00: No derivative 0.00~10.00s	

Parameters	Name	Factory default value	Setting range	Description
F8.12	PID output upper limit	100.0	0.0~100.0%	
F8.13	PID output lower limit	0.0	0.0~100.0%	
F8.14	PID output filtering time	0.00	0.00~10.00s	
F8.15	Feedback fault action selection	2	0～4	0: Run at upper limit frequency 1: Run at lower limit frequency 2: Run at digit set frequency 3: Stop in deceleration mode 4: Stop in free mode
F8.16	Loss detection value	0.0	0.0~100.0%	
F8.17	Loss detection time	1.0	0.0~100.0s	
F8.18	Overvalue detection value	100.0	0.0~100.0%	
F8.19	Overvalue detection time	1.0	0.0~100.0s	
F8.20	PID sleep control	0	0～2	0: No sleep function 1: Internal wake-up 2: External input terminal control
F8.21	Sleep shutdown mode	0	0~1	0: Stop in deceleration mode 1: Stop in free mode
F8.22	Sleep frequency	0.00	0.00 Hz ~ Maximum frequency	
F8.23	Sleep pressure	95.0%	F8.25 ~100.0%	
F8.24	Sleep delay time	30.0	0.0~6000.0s	
F8.25	Wake-up pressure	80.0%	0.0%~F8.23	
F8.26	Wake-up delay time	3.0	0.0~60.0s	

Parameters	Name	Factory default value	Setting range	Description
F8.27	PID range lower limit	0.0	-3276.8~ 3276.8	Since the display screen has 4 digital tubes, the number of digits displayed may not be consistent with the actual value, but it does not affect the final set value.
F8.28	PID range upper limit	10.0	-3276.8~ 3276.8	Since the display screen has 4 digital tubes, the number of digits displayed may not be consistent with the actual value, but it does not affect the final set value.
F8.29	Number of decimal points of the range	1	0~3	0: Display no decimal point 1: Display one decimal point 2: Display two decimal points 3: Display three decimal points This parameter is only used to control the decimal point display of F8.03, F8.25, F8.26, d0-11 and d0-12.
F8.30	Water shortage detection frequency	48.00Hz	0.00 Hz ~ Maximum frequency	
F8.31	Water shortage detection pressure	0.0	0.0~F8.28	
F8.32	Water shortage detection time	60.0s	0~6500.0 s	
F8.33	Water shortage restart time	600.0s	0~6500.0 s	
F8.34	Number of restarts due to water shortage	6	9999	
F8.35	Retain			
F8.36	Photovoltaic pump running mode	0	0~2	0: Disable 1: Photovoltaic pump running mode 1 2: Photovoltaic pump running mode 2
F8.37	MPPT low point working voltage	Based on the model	0 ~ MPPT high point working voltage	If the bus voltage (d-03) is higher than the set value of MPPT high point working voltage (F8.38), run at the maximum frequency; If it is lower than

Parameters	Name	Factory default value	Setting range	Description
F8.38	MPPT high point working voltage	Based on the model	MPPT low point working voltage ~ 1,000V	the set value of MPPT high point working voltage (F8.38), run at the frequency obtained from (bus voltage /MPPT high point working voltage) * maximum frequency; If the bus voltage reaches the MPPT low point working voltage (F8.37), run at the running frequency for water output (F8.44).
F8.39	Water shortage fault shielding	0	0~1	0: No shielding 1: Shielding
F8.40	Undervoltage restart enabling	0	0~1	0: Disable 1: Enable
F8.41	Undervoltage restart delay	10.0s	0.0s~ 360.0s	The delay time is calculated from the beginning of undervoltage
F8.42	Self-start when power on	0	0~3	0: Do not enable; 1: Enable auto-start upon power-up; 2: Enable auto-start after fault reset; Note: If you enable both of the above functions, set it to the sum of the two values, which is 3.
F8.43	Proportion of the water shortage detection current in the no-load current of the photovoltaic pump	0.0	0.0~ 300.0%	If the frequency converter operates above the minimum running frequency for water output (F8.44) and the output current is less than the no-load current of the motor (F9.11)* the proportion of the water shortage detection current in the no-load current of the photovoltaic pump (F8.43), the frequency converter will report the water shortage fault ELT after the water shortage detection time of the photovoltaic pump (F8.45).
F8.44	Minimum running frequency for water output of the photovoltaic pump	0.00	0~ 99.99Hz	
F8.45	Water shortage detection time of the photovoltaic	0.0	0~250.0s	

Parameters	Name	Factory default value	Setting range	Description
	pump			
F8.46	Swing frequency control	0	0~1	0: Disable 1: Enable
F8.47	Swing amplitude control	0	0~1	0: Fixed swing amplitude The reference value of swing amplitude is the maximum output frequency (F0.08). 1: Variable swing amplitude The reference value of swing amplitude is the given channel frequency.
F8.48	Starting mode selection after swing frequency stop	0	0~1	0: Start according to the memory before stop 1: Restart
F8.49	Swing frequency amplitude value	0.0%	0.0%~ 100.0%	The swing frequency amplitude value is a percentage relative to the maximum output frequency (F0.08).
F8.50	Hopping frequency	0.0%	0.0%~ 50.0%	This function code refers to the amplitude of rapid decline after the frequency reaches the upper limit of the frequency in the process of frequency swing, and it also refers to the amplitude of rapid rise after the frequency reaches the lower limit of the frequency swing. This value is a percentage relative to the swing frequency amplitude value (F8.49). If it is set as 0.0%, there is no hopping frequency.
F8.51	Swing frequency rising time	5.0s	0.1s~ 400.0s	The running time from the lower limit to the upper limit of swing frequency.

Parameters	Name	Factory default value	Setting range	Description
F8.52	Swing frequency drop time	5.0s	0.1s~ 400.0s	The running time from the upper limit to the lower limit of swing frequency.
F8.53	Delay of the lower limit of swing frequency	5.0s	0.1s~ 999.9s	To set the delay of the lower/upper limit of swing frequency.
F8.54	Delay of the lower limit of swing frequency	5.0s	0.1s~ 999.9s	
F8.55	Retain			
Group F9 - Motor parameter setting				
F9.00	Rated power	Based on the model		Motor parameter setting
F9.01	Rated voltage	Based on the model	1~500V	Motor parameter setting
F9.02	Rated current	Based on the model	0.01～ 99.99A	
F9.03	Rated rotation speed	Based on the model	0～ 60000rpm	
F9.04	Rated frequency	50.0Hz	1.0～ 400.00Hz	
F9.05	Parameter identification	0	0~1	0: Disable parameter identification; 1: Enable static identification of parameters, automatically set to 0 at the end of identification;
F9.06	Stator resistance	Based on the model	0.001～ 65.535Ω	For different models, there are corresponding default values, and parameter identification will automatically change the value;
F9.07～ F9.09	Rotor resistance, leakage inductance, mutual inductance, etc.	Based on the model		For different models, there are corresponding default values, and parameter identification will automatically change the value;

Parameters	Name	Factory default value	Setting range	Description
F9.11	No-load current	Based on the model	0.01～	To set no-load current of motor; For different models, there are corresponding default values, and parameter identification will automatically change the value;
Group FA - Protection parameter setting				
FA.00	Overload protection	0	00~31	Units digit: Motor overload enable Tens digit: Inverter overload pre-warning enable (1: Terminal function output), Inverter overload pre-warning enable: 2: Terminal function output, fault shutdown.
FA.01	Motor overload protection factor	100%	30%～110%	The motor overload protection factor is the percentage of the rated current value of the motor to the rated output current value of the frequency converter.
FA.02	Undervoltage protection level	180/360V	150-280 300～480V	This function code specifies the minimum allowable DC bus voltage when the converter is working normally.
FA.03	Overvoltage stall enable	1	0~1	0: Disable 1: Enable
FA.04	Overvoltage limit level	375/660V	350-380 660～760V	The overvoltage limit level defines the operating voltage for overvoltage stall protection
FA.05	Current limiting level	150%	30%～200%	The current limiting level defines the threshold of current for the automatic limiting operation, and its set value is a percentage relative to the rated current of the frequency converter.
FA.06	Frequency drop rate during current limiting	0	0～99.99Hz/s	
FA.07	Selection of current limiting action	0	0～2	0: Void 1: Acceleration/deceleration is effective, and constant speed is ineffective

Parameters	Name	Factory default value	Setting range	Description
				2: Acceleration/deceleration is effective, and constant speed is effective
FA.08	Converter overload alarm level	120%	50～150%	It refers to the threshold of current for converter overload alarm action, and its set value is the percentage relative to the rated current of the converter.
FA.09	Converter overload alarm delay	5.0s	0.0~15.0s	It refers to the delay time from the moment that the output current of the frequency converter becomes continuously greater than the overload alarm level (FA.08) to the moment that the overload alarm signal is sent.
FA.10	Oscillation suppression coefficient	30	0～200	Generally, when motor oscillation occurs, the oscillation suppression coefficient should be increased.
FA.11	Amplitude suppression coefficient	20	0～1000	To set the maximum amount of adjustment for oscillation suppression.
FA.12	Oscillation suppression lower limit frequency	5.00Hz	0.0 ~ Oscillation suppression upper limit frequency (200.00Hz)	Oscillation suppression is ineffective when it is below such frequency.
FA.13	Oscillation suppression upper limit frequency	50.00Hz	Oscillation suppression lower limit frequency (0) ~ 200.00Hz	Oscillation suppression is ineffective when it is above such frequency.
FA.14	Retain			
FA.15	Retain			
FA.16	Number of automatic fault resets	0	0～10	When the reset number is set to 0, the automatic reset function is disabled except for manual reset. 10 means that the reset number is not limited.
FA.17	Automatic fault	3.0s	0.5～25.0s	To set the automatic fault reset interval

Parameters	Name	Factory default value	Setting range	Description
	reset interval time			time
FA.18	VF overcurrent/overvoltage suppression enable	3	0~3	0: no operation 1: Enable overcurrent suppression 2: Enable overvoltage suppression 3: Enable overcurrent/overvoltage suppression
FA.19	VF overcurrent suppression Kp	20	0～100	
FA.20	Current compensation factor of VF multiple speed overcurrent stall action	50	50～200	
FA.21	VF overvoltage suppression Kp	60	0～100	
FA.22	Maximum frequency of VF overvoltage stall rise	5	0～50	
FA.23	VF overvoltage stall voltage regulation Kp	80	0～100	
FA.24	Powerdown and undervoltage stop mode	0	0~1	0: Report undervoltage fault, and stop in free mode; 1: Not report undervoltage fault, and stop according to the set stop mode (F3.05).
FA.25	Retain			
FA.26	Output phase loss	1	0~1	0: Disable output phase-loss protection 1: Enable output phase-loss protection
FA.27	DC braking voltage	220V:370 380V:660	Based on model 350~790	
FA.28～FA.39	Reserved			

Parameters	Name	Factory default value	Setting range	Description
FA.40	Current limiting frequency reduction	0	0～15	1: Current limiting frequency reduction enabled; 2: Low voltage frequency reduction enabled; 4: Reserved; 8: Input phase loss enabled; Note: If multiple functions are enabled, set it to the sum of the corresponding function values.
FA.41	Current limiting frequency reduction setting	100.0%	0～180.0%	This parameter is based on motor current calculation: (FA.41 * F9.02) = Current limiting frequency reduction point
FA.42	Current window size for no frequency adjustment during current limiting frequency reduction	1.0%	0.0～100.0%	calculated as a percentage of motor current.
FA.43	Step-down amount per step	0.05	0.01～50.00	
FA.44	Maximum current limiting frequency reduction	50.0%	0.0～100.0%	Calculated as a percentage of the motor's rated frequency.
FA.45	Input phase loss detection threshold	40	0～1000	
FA.46	Reserved			
FA.47	Reserved			

Parameters	Name	Factory default value	Setting range	Description
FA. 48	Degree of low voltage frequency reduction	2048	0～4096	
Group Fb - Display and special parameter setting				
Fb.00	Operation monitoring parameters	0	0～15	Default display items of the main monitoring interface. The corresponding numbers are Group d parameters.
Fb.01	Stop monitoring parameters	1	0～15	Default display items of the main monitoring interface. The corresponding numbers are Group d parameters.
Fb.02	Motor rotation speed display factor	1.00	0.01～99.99	It is used to correct the display error of the tachometer scale, and has no impact on the actual speed.
Fb.03	Current fault	0	0～9999	Current fault code
Fb.04	Previous fault	0	0～9999	Previous fault code
Fb.05	Fault before the previous fault	0	0～9999	Code of fault before the previous fault
Fb.06	Fault voltage	0	0～9999	Bus voltage at the time of fault
Fb.07	Fault current	0	0～999.9	Bus current at the time of fault
Fb.08	Fault setting frequency	0	0～300.0	The set frequency at the time of fault
Fb.09	Fault running frequency	0	0～300.0	Running frequency at the time of fault
Fb.10	Counting and timing mode	103	000～303	Units digit: Treatment after reaching the count, 0: single-cycle counting, stop output, 1: single-cycle counting, continue output, 2: cycle counting, stop output 3: cycle counting, continue output. Tens digit: Retain Hundreds digit: Treatment after reaching the time, 0: single-cycle timing, stop output, 1: single-cycle timing, continue output, 2: cycle

Parameters	Name	Factory default value	Setting range	Description
				timing, stop output 3: cycle timing, continue output. Thousands digit: Retain
Fb.11	Counter reset value setting	1	0～9999	To set the counter reset value
Fb.12	Counter detection value setting	1	0～9999	To set the counter detection value
Fb.13	Time setting	0	0～9999s	To set the time
Fb.14	Retain			
Fb.15	Retain			
Fb.16	Retain			
Fb.17	Retain			
Fb.18	Retain			
Fb.19	Retain			
Fb.20	Software upgrade date (year)			
Fb.21	Software upgrade date (day/month)			
Fb.22	Display software version	1.00		
Fb.23	Product series	321		
Fb.24	Auxiliary display of stop and running (dual display only)	4	0~15	Default display items of the main monitoring interface. The corresponding numbers are Group d parameters.
Fb. 25	Reserved			
Fb. 26	Motor control library version			
Fb. 27	Motor control library			

Parameters	Name	Factory default value	Setting range	Description
	compilation time — Year			
Fb. 28	Motor control library compilation time — Month Day			
Group FC - Communication parameter setting				
FC.00	Communication baud rate	3	0～5	0: 1200 3: 9600 1: 2400 4: 19200 2: 4800 5: 38400
FC.01	Communication format	0	0~3	Data format: <Data length, stop position> 0: No parity, <8,1> 1: Odd parity, <8,1> 2: Even parity, <8,1> 3: No parity, <8,2>
FC.02	Communication address	1	1～247	1-247 represents the local machine address
FC.03	Communication timeout	10.0s	0.0~600.0s	
FC.04	Retain			
FC.05	Communication error handling	1	0～2	0: no operation, 1: alarm, 2: fault stop
Group FP - Factory parameter setting				
FP.00	Factory password		1~9999	Special password for system settings

Group d - Monitoring parameters			
Parameters	**Name**	**Range**	**Smallest unit**
d-00	Output frequency (Hz)	0.00～400.00Hz	0.01Hz
d-01	Set frequency (Hz)	0.00～400.00Hz	0.01Hz
d-02	Output voltage (V)	0～999V	1V

d-03	Bus voltage (V)	0～999V	1V
d-04	Output power (A)	0.0～999.9A	0.1A
d-05	Motor rotation speed (Krpm)	0～60000Krpm	1Krpm
d-06	Analog input AVI (V)	0.00～10.00V	0.01V
d-07	Analog input ACI (mA)	0.00～20.00mA	0.01mA
d-08	Analog output AO (V)	0.00～10.00V	0.01V
d-09	Input terminal state (Relay, X1-X5)	0～3FH	1H
d-10	Temperature	0～9999	0.1℃
d-11	PID given value	PID range lower limit ~ PID range upper limit	1
d-12	PID feedback value	PID range lower limit ~ PID range upper limit	1
d-13	Current counting value	0～9999	1s
d-14	Current timing value (s)	0～9999s	1s
d-15	Accumulative running time of frequency converter (h)	0～9999h	1h
d-16	Accumulative power-on time of frequency converter (h)	0～9999h	1h
d-17	U-phase current sampling bias value	0～4095	
d-18	V-phase current sampling bias value	0～4095	
d-19	W-phase current sampling bias value	0～4095	
d-20	Retain		
d-21	Retain		
d-22	Retain		

Fault code			
Fault code	**Name**	**Possible causes**	**Countermeasures**
OU1 (1)	Overvoltage in accelerated	Abnormal input voltage	Check the input power supply

	running	Restart the motor in rotation	Change the setting to start after DC braking
OU2 (2)	Overvoltage in decelerated running	Deceleration time is too short	Extend deceleration time
		Abnormal input voltage	Check the input power supply
OU3 (3)	Overvoltage in constant speed running	Abnormal input voltage	Check the input power supply
OCC1 (4)	Hardware acceleration overcurrent	Acceleration time is too short	Extend acceleration time
		The power of frequency converter is small	Choose a frequency converter with a large power
		Improper setting of V/F curve or torque lift	Adjust the V/F curve or torque lift
		The IGBT module is damaged	Contact the supplier for help
OCC2 (5)	Hardware deceleration overcurrent	Deceleration time is too short	Extend deceleration time
		The power of frequency converter is small	Choose a frequency converter with a large power
		The IGBT module is damaged	Contact the supplier for help
OCC3 (6)	Hardware constant speed overcurrent	The grid voltage is low	Check the input power supply
		The load is mutated or abnormal	Check the load or reduce load mutation
		The power of frequency converter is small	Choose a frequency converter with a large power
		The IGBT module is damaged	Contact the supplier for help
OCS1 (7)	Overcurrent in software accelerated running	Acceleration time is too short	Extend acceleration time
		The power of frequency converter is small	Choose a frequency converter with a large power
		Improper setting of V/F curve or torque lift	Adjust the V/F curve or torque lift
OCS2	Overcurrent in	Deceleration time is too	Extend deceleration time

(8)	software decelerated running	short	
		The power of frequency converter is small	Choose a frequency converter with a large power
0CS3 (9)	Overcurrent in software constant speed running	The grid voltage is low	Check the input power supply
		The load is mutated or abnormal	Check the load or reduce load mutation
		The power of frequency converter is small	Choose a frequency converter with a large power
EFO (10)	Power module fault	Converter output short circuited or grounded	Check the motor wiring
		Converter transient overcurrent	See overcurrent countermeasures
		The control board is abnormal or seriously disturbed	Contact the factory for help
		The power device is damaged	Contact the factory for help
OU (11)	Overvoltage during shutdown	Abnormal input voltage	Check the voltage of power supply
OU3 (12)	Constant speed overvoltage	The voltage of power supply is too high	Check whether the voltage of power supply is too high
		The load is mutated or abnormal	Check the load or reduce load mutation
LU (13)	Undervoltage	Abnormal input voltage	Check the voltage of power supply
		Relay failed to pull in	Contact the factory for help
OH (14)	Over-temperature	The ambient temperature is too high	Improve the environment
		The space around the frequency converter is small	Adjust the space
		The air duct is blocked	Clean and clear the air duct
		The cooling fan is not running	Check the power supply of the fan and the fan itself
OL1 (15)	Converter overload	Improper setting of V/F curve or torque lift	Adjust the V/F curve and torque lift
		The grid voltage is too low	Check the grid voltage

		Acceleration time is too short	Extend acceleration time
		The motor is overloaded	Choose a more powerful frequency converter
OL2 (16)	Motor overload	Improper setting of V/F curve or torque lift	Adjust the V/F curve and torque lift
		The grid voltage is too low	Check the grid voltage
		Locked rotor or load mutation is too large	Check the load
		Motor overload protection factor is not set correctly	Set the motor overload protection factor correctly
BIAS (17)	Current bias error	Hardware failure	Contact the supplier for help
CBC (18)	Cycle-by-Cycle current liming fault	The power of frequency converter is small	Choose a frequency converter with a large power
		The load is mutated or abnormal	Check the load or reduce load mutation
FBL (19)	Low PID feedback lower limit value	PID feedback line is loose	Check the feedback line
		The feedback quantity is less than the disconnection detection value	Adjust the detection input threshold
FBH (20)	PID feedback exceeds the upper limit	When the PID feedback quantity is greater than the feedback overvalue detection value, and the duration is longer than the PID feedback overvalue detection time, the frequency converter alarms the fault FBH	Check the feedback line
			Adjust the detection input threshold
EEEP (21)	EEPROM reading/writing error	EEPROM fault	Contact the factory for help
CE (22)	Dual CPU communication failure	CPU communication failure	Contact the factory for help
EF (23)	External equipment fault	External device fault input terminal is closed	Disconnect the external device fault input terminal and clear the fault (check the cause)
EPA	Parameter		

(24)	setting failure		
E485 (25)	Communication disconnection		Check whether the communication line is well connected and whether the line sequence is correct.
SFOC (27)	Software overcurrent		Adjust acceleration/deceleration time; Motor parameters do not match, restart parameter identification;
ELH （28）	Water shortage fault		
SPO （29）	Output phase-loss fault	The wiring from the converter to motor is not normal	Troubleshoot wiring problems
		The three-phase output of the frequency converter is unbalanced	Check whether the three-phase winding of the motor is normal
		The driver board is abnormal	Contact the factory for help
		The module is abnormal	Contact the factory for help
AUTH （34）	Unauthorized	Has not gone through the factory authorization process.	Return to factory.
LCP (35)	Input phase loss	Input phase loss	Check the input circuit.
Warning code			
EPA1	Parameter setting error	The three-wire function of the converter is not set correctly	Check whether the three-wire system of the converter terminal is set correctly
r485	Communication disconnection		
SLEP	Sleep mode	The frequency converter goes into sleep mode	

Appendix Communications

1. Product Parameter Data

The parameter data are the important setting parameters of the frequency converter, and the parameters are as follows:

Product Parameter Data	Group F (read-write)	F0, F1, F2, F3, F4, F5, F6, F7, F8, F9, FA, FB, FC,

Parameter data communication address is defined as follows:

1） When reading the parameter data for purpose of communication, for the parameter data of Group F0-FC, the higher 16 bits of the communication address are directly 00-0C, and the lower 16 bits are directly the sequence number of the parameter in the function group, for example:

The communication address of F0-16 functional parameter is 0010H, where 00H represents the functional parameters of F0 group, and 10H represents the hexadecimal data format with the serial number 16 in the functional group.

2） When writing parameter data for purpose of communication,

3） For the parameter data of Group F0-FC, the higher 16 bits of the communication address are directly 00-0C, and the lower 16 bits are directly the sequence number of the parameter in the function group, for example:

4） For functional parameter F0-16:

5） When writing, its communication address is 0010H

2. Product Non-parameter Data

Product Non-	Status data (read only)	Monitoring parameters, converter fault description, converter running state

parameter Data	Control parameters (write only)	Control command, communication set value

Status data

The status data include monitoring parameters, converter fault description, and converter running state

For monitoring parameters, the function code in this table is not consistent with the parameter table, please follow this table when communicating, and the address is as follows: (Function code is not continuous)

Function code	Name of the monitoring parameter	Communication address
d-00	Running frequency	7000H
d-01	Set frequency	7001H
d-03	Bus voltage	7002H
d-02	Output voltage	7003H
d-04	Output current	7004H
	Retain	7005H~7006H
d-09	DI/DO input status	7007H
	Retain	7008H
d-06	AI1 voltage	7009H
d-07	AI2 voltage	700AH
	Retain	700BH~700EH
d-11	PID given value	700FH
d-12	PID feedback value	7010H
	Retain	7011H~7017H
d-05	Motor rotation speed	7018H
d-16	Current power-on time	7019H
d-15	Current running time	701AH
	Retain	701BH~7021H
d-10	Radiator temperature	7022H

For example: To check the output current of d-04, the communication address is

7004H

Converter fault description

When the communication reads the fault description of the frequency converter, the communication address is fixed to be 8000H, and the host computer can obtain the fault code of the current frequency converter by reading such address data. For the description of the fault code, see the parameters in the "Functional Parameter Table".

Converter running state

When the communication reads the running state of the frequency converter, the communication address is fixed to be 3000H, and the host computer can obtain the state data of the current frequency converter by reading such address data, which is defined as follows:

Communication address of converter running state	Digit definition for reading state
3000H	1: Forward running
	2: Reverse running
	3: Shut down

Control parameters:

Control parameters include control command, digital output terminal control, analog output AO1 control, analog output AO2 control and high speed pulse (FMP) output control

Control command:

When 2: communication control is selected for F0-02 (command source), the host computer can realize relevant command control such as start and stop of the frequency converter through such communication address. The control command is defined as follows:

Communication address of converter	Digit definition for reading state

running state	
2000H	1: Forward running
	2: Reverse running
	3: Forward jog
	4: Reverse jog
	5: Stop in free mode
	6: Stop in deceleration mode
	7: Fault reset

Communication set value

Communication set value is mainly used as the given data when the frequency source, torque upper limit source, V/F separated voltage source, PID given source and PID feedback source of the product are selected as the given data for communication. Its communication address is 1000H. When the host computer sets the communication address value, its data range is -10,000~10,000, and the corresponding given value is -100.00%~100.00

3. Modbus Communication Protocol

The product series converter provides RS485 communication interface and supports Modbus-RTU slave communication protocol. The user can realize centralized control through the computer or PLC, and set the running command of the frequency converter, modify or read the parameters, and read the working state and fault information of the frequency converter through the communication protocol. The serial communication protocol defines the content and format of information transmitted in serial communication. These include: Host polling (or broadcast) format; Host coding method, including: Parameters of required action, transmission data, error checking, etc. The response of the slave machine adopts the same structure, including: Action validation, return data and error checking, etc. If the slave makes an error in receiving the information, or fails to complete the action requested by the host, it will send a failure message to the host as a response.

3.1 Application mode

The frequency converter is connected to the "one host and multiple slave" PC/PLC control network with RS485 bus as a communication slave.

3.2 Bus structure

Topological structure

It adopts "one host and multiple slave" system. Every communication device in the network has a unique slave address, among which, one device acts as a communication host (usually PC upper computer, PLC, HMI, etc.) to initiate communication and perform parameter reading or writing operations on the slave, while the other devices act as communication slaves and respond to the host's inquiries or communication operations on themselves. Only one device can send data at a time while the other devices are in the receiving state. The slave address is set in the range of 1 to 247, and 0 is the broadcast address. Slave addresses in the network must be unique.

Means of communication transmission

It adopts asynchronous serial and half duplex transmission mode. Data is sent one

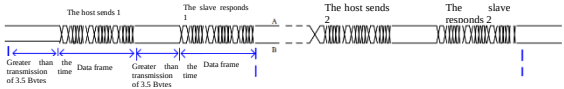

frame at a time in the form of message during asynchronous serial communication. According to the MODBUS-RTU protocol, when the idle time of no data on the communication data line is greater than the transmission time of 3.5 Bytes, it indicates the start of a new communication frame.

The host sends 1, the slave responds 1, the host sends 2, the slave responds 2, greater than the transmission time of 3.5 Bytes, data frame. The built-in communication protocol of AB product series converter is Modbus-RTU slave communication protocol, which can respond to the "query/command" of the host, or make corresponding actions according to the "query/command" of the host, and communicate data response. The host may refer to a personal computer (PC), industrial control equipment or programmable logic controller (PLC), etc. The host can not only communicate with a slave alone, but also publish broadcast information to all slaves. For a separate access "query/command" of the host, the accessed slave needs to

return a response frame; for the broadcast information sent by the host, the slave does not need to respond to the host.

4. Communication data structure

The product series frequency converter has the following Modbus-RTU protocol communication data format. The converter only supports reading or writing of Word parameters, and the corresponding "reading" command is 0x03; the "writing" command is 0x06. The operation command to write a set of parameters continuously is 0x10. It supports byte or bit reading and writing operations.

Example 1: Read the parameter d-01(set frequency), query d-01 set frequency parameters, and receive the return value of 0Hz

Modbus address	Function code	High byte of parameter number	Low byte of parameter number	High byte of word number	Low byte of word number	CRC high byte	CRC low byte
0x01	0x03	0x70	0x01	0x00	0x01	0xCF	0x0A

Response:

Modbus address	Function code	Number of bytes	High byte of data	Low byte of data	CRC high byte	CRC low byte
0x01	0x03	0x02	0x00	0x00	0xB8	0x44

Example 2: Write the parameter F0-08 (maximum frequency of the frequency converter) as 20.00Hz, and the setting is successful if the set value is returned

Modbus address	Function code	High byte of parameter number	Low byte of parameter number	High byte of word number	Low byte of word number	CRC high byte	CRC low byte
0x01	0x06	0x00	0x08	0x07	0XD0	0x0B	0xA4

Response:

Modbus address	Function code	High byte of parameter	Low byte of parameter	High byte of word	Low byte of word	CRC high byte	CRC low byte

		number	number	number	number		
0x01	0x06	0x00	0x08	0x07	0XD0	0x0B	0xA4

Example 3: Reset the parameter to factory value F0-17 setting 1, the parameter is restored to factory value

Modbus address	Function code	High byte of parameter number	Low byte of parameter number	High byte of word number	Low byte of word number	CRC high byte	CRC low byte
0x01	0x06	0x00	0x11	0x00	0X01	0x18	0x0F

Response:

Modbus address	Function code	High byte of parameter number	Low byte of parameter number	High byte of word number	Low byte of word number	CRC high byte	CRC low byte
0x01	0x06	0x00	0x0A	0x07	0XD0	0x18	0x0F

Description of data frame fields:

Frame header START	Idle time greater than the transmission time of 3.5 bytes
Slave address ADR	Communication address range: 1 ~ 247;
Command code CMD	03: Read slave parameters; 06: Write slave parameters; 10: Write a set of parameters continuously
Parameter address H	It refers to the converter internal parameter address, which is expressed in hexadecimal; It includes parametric and non-parametric (such as running state parameters, running commands, etc.) parameters, etc. See the address definition for details. When transmitting, high bytes come first and low bytes come second.
Parameter address L	
Number of parameters H	It refers to the number of parameters read by the frame. If it is 1, it means that one parameter is read. When transmitting, high bytes come first and low bytes come second. When the command code is 03, this protocol can only rewrite one parameter at a time, and there is no such field.
Number of parameters L	
Data H	It refers to the data to be responded, or the data to be written. When transmitting, high bytes come first and low bytes come second.
Data L	

CRC CHK low byte	Detection value: CRC16 check value. When transmitting, low bytes come first and high bytes come second. The calculation method is detailed in the description of CRC checking in this section.
CRC CHK high byte	
END	When in 3.5 characters

CRC Check method:

CRC (Cyclical Redundancy Check) uses RTU frame format, and the message includes error detection fields based on the CRC method. The CRC field detects the content of the entire message. The CRC field is two bytes containing a 16-bit binary value. It is calculated by the transmission device and added to the message. The receiving device recalculates the CRC of the received message and compares it with the value in the received CRC field. If the two CRC values are not equal, there is an error in the transmission. CRC first stores 0xFFFF and then invokes a procedure to process the consecutive 8-bit bytes in the message and the value in the current register. Only the 8 bits of data in each character are valid for CRC, and the start and stop bits and the parity bits are not valid for CRC. In the CRC generation process, each 8-bit character is separately XOR with the register content, and the result is shifted in the direction of the least significant bit and the most significant bit is filled with 0. The LSB is extracted and detected. If the LSB is 1, the register separately XOR with the preset value, if the LSB is 0, XOR is not performed. The whole process will be repeated eight times. After the last bit (bit 8) is completed, the next 8-bit byte separately XOR with the current value of the register. The final value in the register is the CRC value after all bytes in the message have been performed XOR. When a CRC is added to a message, the lower bytes are added first, followed by the higher bytes. The CRC simple function is as follows:

```
unsigned int crc_chk_value（unsigned char *data_value,unsigned char length）
{
    unsigned int crc_value=0xFFFF;
    int i;
        while（length--）
        {
                crc_value^=*data_value++;
                for（i=0;i>1）
                {
                        if（crc_value&0x0001）
                        {
                                crc_value=（crc_value>>1）^0xa001;
                        }
                        else
                        {
                        crc_value=crc_value>>1;
```

```
                    }
                }
        }
        return（crc_value）;
}
```

5. Parameter address labeling rules

Parameter group number and labeling number are used as parameter address labeling rules:

High bytes: 00~0F (Group F), 70 (Group d)

Low bytes: 00~FF

For example: To access parameters F3-12, the access address of the parameter is expressed as 0x030C;

Note: Group FP: Parameters cannot be read or changed;

Group d: Parameters can be read but can not be changed;

Some parameters can not be changed when the converter is in the running state; some parameters can not be changed regardless of the state of the converter; pay attention to the parameter range, unit and related instructions when changing the parameters.

Parameter Group number	Communication access address
Group F0~FC	0x0000 ～ 0x0EFF
Group d0	0x7000 ～ 0x70FF

Communication set value:

The communication set value is the percentage of the relative value, with 10000 corresponding to 100.00%, and -10000 corresponding to -100.00%;

Parameter address	Parameter description
1000H	Communication set value (decimal) -10000 ~ 10000

Control command input to the frequency converter: (Write only)

Command word address	Command functions
2000H	0001: Forward running
	0002: Reverse running
	0003: Forward jog
	0004: Reverse jog

	0005: Stop in free mode
	0006: Stop in deceleration mode
	0007: Fault reset

Read the converter status: (Read only)

Status word address	Status word functions
3000H	0001: Forward running
	0002: Reverse running
	0003: Shut down

Converter fault description:

Converter fault address	Converter fault information (hexadecimal)
8000H	0000: No fault 0002: Acceleration overcurrent 0003: Deceleration overcurrent 0004: Constant speed overcurrent 0005: Acceleration overvoltage 0006: Deceleration overvoltage 0007: Constant speed overvoltage 0008: Hardware deceleration overcurrent 0009: Undervoltage fault 000A: Converter overload 000B: Motor overload 000E: Over-temperature fault 000F: External input fault 0010: Communication fault 0012: Current bias error0013: PID feedback exceeds the limit

	0014: PID feedback value is low 0015: Parameter setting fault 001F: PID feedback is lost at runtime 0070: EEPROM fault The remaining ones not listed are retained

6. Descriptions of Group FC Communication parameters

FC-00	Baud rate	Factory default value	3
	Units digit: Modbus baud rate		
	Setting range	0: 1200 1: 2400 2: 4800 3: 9600	4: 19200 5: 38400

This parameter is used to set the data transmission rate between the host and the frequency converter. Note: the baud rate of the host and the frequency converter must be the same, otherwise, the communication cannot be carried out. The higher the baud rate, the faster the communication speed.

FC-01	Data format	Factory default value	0W
	Setting range	Data format: <Data length, stop position> 0: No parity, <8,1> 1: Odd parity, <8,1> 2: Even parity, <8,1> 3: No parity, <8,2>	

The data format of the host and the frequency converter must be the same, otherwise, the communication cannot be carried out.

FC-02	Local machine address	Factory default value	1
	Setting range	1~247	

The local machine address is unique, which is the basis of point-to-point communication between the host and the converter.

FC-03	Communication timeout	Factory default value	10.0s
	Setting range	0.0s~600.0s	

When this parameter is set to a valid value, if the interval time between one communication and the next communication exceeds the communication timeout, the system will report a communication fault. Typically, this parameter is set to invalid. In a continuous communication system, this parameter can be set to monitor the communication status.

FC-05	Communication error handling	Factory default value	1
	Setting range	0: no operation 1: Alarm	2: Fault stop

Service Delivers Value, Quality Builds Brilliance

To users:

Thank you for using our products. In order to ensure that you get the best after-sales service from our company, please carefully read and follow the following terms.

1. Product warranty coverage

Any fault that occurs under normal use according to the use requirements will be covered by the warranty.

2. Product warranty period

The warranty period of this product is twelve months from the date of delivery. After the warranty period, we will provide a long-term technical support.

3. Circumstances that not covered by the warranty

Any violation of the use requirements and damage due to human causes, natural disasters or flooding water, external damage, bad environment and other reasons, as well as the disassembly, modification and maintenance of the frequency converter without permission, will not be covered by this warranty.

4. Purchase this product from a reseller

If the product is purchased from a distributor or an agent, please contact such distributor or agent in case of any fault.

Please keep this Manual properly in case of need.

ef. No.: XM-H0123

Completed in July 2021